Aluminum Housed Resistor

- Aluminum-housed wirewound resistors adopt aluminum alloy shells with elegant appearance. They feature better weather resistance, vibration resistance and safety performance than traditional ceramic core resistors.This type of power wirewound resistor is encapsulated with high-temperature resistant organic resin and silicon powder. It allows compact installation and easy fitting of additional heat sinks.Widely used in high-standard electric circuits such as power supplies, frequency converters and servo systems, it is applicable to harsh industrial control environments and serves as an ideal matching component for power electronic equipment.



符合标准:GB/T 5729-2003

Application Range

- It protects inverters, servos and other devices from damage caused by motor regenerative electric energy as braking resistors.
- Serves as resistive load in power electronic load tests.
- Used as voltage-sharing, current-limiting, starting and braking resistors in power electronic equipment.

Model Selection

XD6Z	2KW	–	40R	–	J
Series Code	Rated Power Produce according to requirements 60W 200W 2KW 6KW		Resistance Value Produce according to requirements 40:40R 50:50R 60:60R		Resistance Tolerance H:3% J:5% K:10%

Technical Specifications

Resistance Deviation	±5% (R ⩽ 1Ω), ±10% (R>1Ω)
Short-time Overload	Operate at 10 times rated power for 5 seconds without visible damage, resistance change ΔR ⩽ ±(2%R+0.05Ω)
Insulation Resistance	⩾ 100MΩ, 1000V DC 60s
Temperature Characteristics	±500PPM/℃
Terminal Strength	100N for 30 seconds, no loosening or mechanical damage
Vibration Resistance	Frequency: 10~55Hz, acceleration: 1.5g, 2 hours each for X, Y and Z axes, no visible damage, resistance variation ΔR ⩽ ±(2%R+0.05Ω)
Heat Resistance	350℃ for 2 hours, no obvious discoloration or damage except terminals, marks remain clear.
Thermal Shock	Operate at rated power for 30 minutes, expose at -55℃ for 15 minutes, then place at normal temperature for 2 hours. No visible mechanical damage, resistance change ΔR ⩽ ±(2%R+0.02Ω).
Moisture Resistance	100V DC, 40℃, 95%RH, 500 hours. No visible damage, clear marking, resistance variation ΔR ⩽ ±(3%R+0.05Ω), insulation resistance ⩾ 25MΩ.
Durability	Operate at rated power, no visible damage on appearance, clear marking, ΔR ⩽ ±(5%R+0.05Ω)
Load Life	300×300×3mm aluminum plate, operate at rated power under normal temperature, 90 minutes on and 30 minutes off cyclically for 500 plus 24 hours. No visible damage on appearance with clear markings, ΔR ⩽ ±(5%R+0.05Ω).

Circuit Structure Diagram

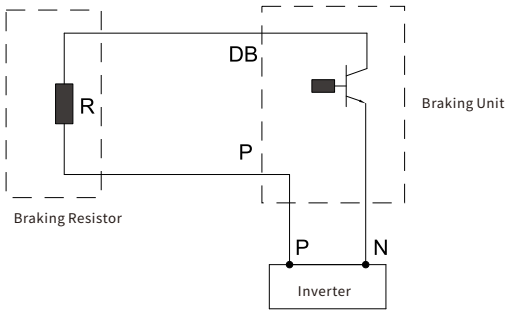

Derating Curve

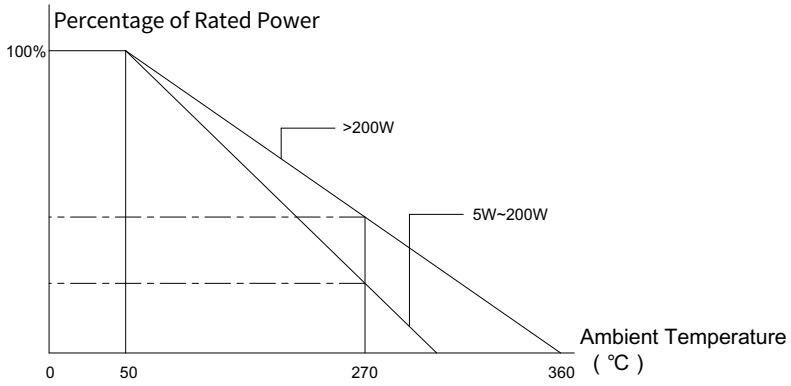

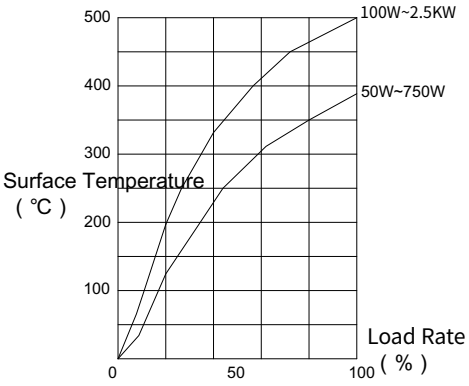

No.1

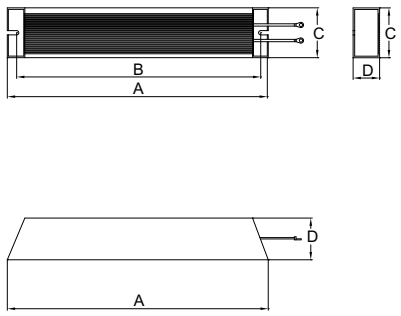

No.2

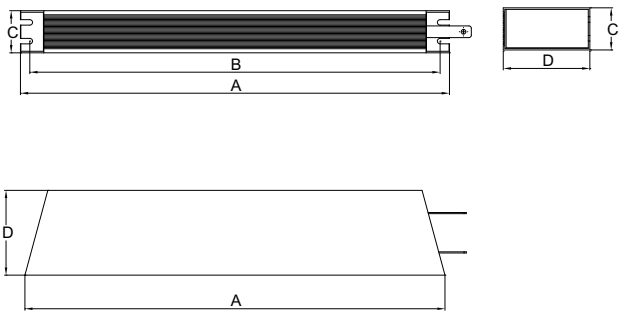

Appearance and Dimensions

Corresponding Drawings	Rated Power (W)	A(mm)	B(mm)	C(mm)	D(mm)	Wiring (mm)	Wiring (mm)	Terminal
No:1	60	115	102	40	20	1.5	250	2-5S
	80	140	127	40	20	1.5	250	2-5S
	100	165	152	40	20	1.5	250	2-5S
	120	190	177	40	20	1.5	250	2-5S
	150	215	202	40	20	1.5	250	2-5S
	200	165	152	60	30	1.5	250	2-5S
	300	215	202	60	30	1.5	250	2-5S
	400	265	252	60	30	1.5	250	2-5S
	500	335	322	60	30	1.5	250	2-5S
No:2	800	400	40.5*382	61	59			M6
	1000	400	30.5*384	50	107			M6
	1200	450	30.5*434	50	107			M6
	1500	485	30.5*469	50	107			M6
	2000	550	30.5*534	50	107			M6
	2500	550	30.5*534	50	107			M6

※Notes | High leakage current, please ground it first.

Wiring specifications and cable lengths can be customized per customer requirements. The default cable length is 250mm if no special requirements are specified when placing orders.Models of 800W and above are also available with lead wire connection customization. M6 terminal connection is adopted by default without special order requirements.All above parameters are for reference only. Please contact us for model selection and customized products.