AC Input Reactor ACL

- The AC input reactor is used to limit current surges caused by sudden grid voltage changes and switching overvoltages, and smooth spike pulses contained in the power supply voltage. It can suppress interference from the power grid, reduce harmonic current pollution to the grid generated by rectifier units, and improve the power factor of the power grid.



Application Scope

- Several inverters connected in parallel
- Obvious disturbances (interference/overvoltage) from other devices exist in the power supply line
- Voltage unbalance occurs among each phase of the power supply line
- Inverters are powered by lines with extremely low impedance
- A large number of inverters are installed on the same power line

Operating Environment

No derating within -10℃ to +45℃. Max ambient temperature up to +55℃. Above 45℃, rated current decreases by 2% per 1℃ rise. Altitude shall not exceed 2000 meters.Operating ambient temperature: -25℃ ~ +45℃, relative humidity ⩽90%. Keep away from harmful gases, flammable and explosive substances.Ensure good ventilation in surrounding area. Install extra ventilation equipment if mounted inside cabinets.

Implementation Standard China :

- **GB/T 19212.1-2016**
- **GB/T 19212.21-2014**
- **GB/T 1094.6-2011**

Model Selection

XD6KA	44	–	T	–	C	–	-0010	–	0M70
Series Code	Working Voltage		Number of Phases		Specifications		Operating Current		Rated Inductance
	44:440V 22:220V 68:680V 110:1140V 120:1200V		T:Three-phase S:Single-phase		C:Copper A:Aluminum		0010:10 1600:1600		M:mH U:uH

Technical Specifications

Rated Voltage	440V AC 50/60Hz	**Insulation Class**	Class F/H
Rated Current	10-1600A	**Voltage Drop**	Less than 4%. Exceeding this range will cause torque loss.
IP Rating	IP00~IP22	**Noise**	≤ 65dB
Maximum Current	1.5 times rated current for 60 seconds continuously	**Dielectric Strength**	Between iron core and winding: 3000V AC, 50Hz, 5mA, 10s, no flashover or breakdown (factory test)
Temperature Rise	⩽ 85K	**Insulation Resistance**	⩾ 100MΩ, 1000V DC

Circuit Structure Diagram

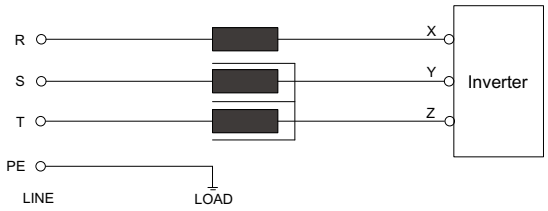

Appearance and Dimensions

No.1

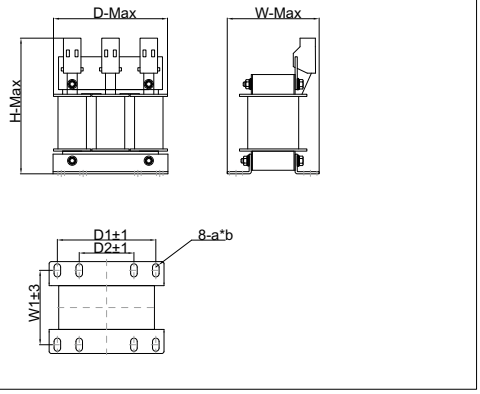

No.2

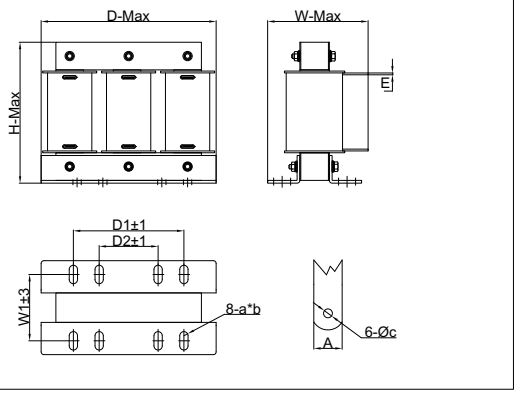

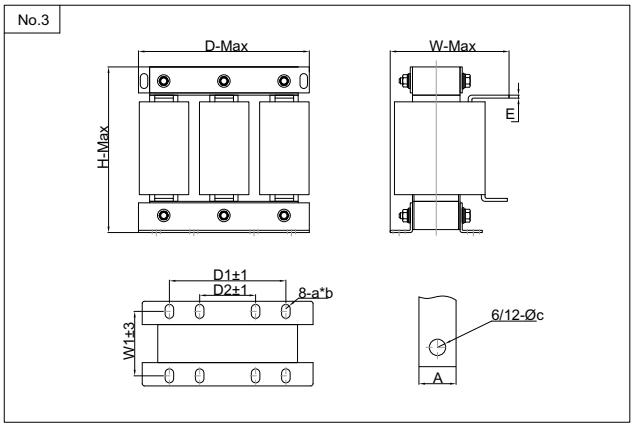

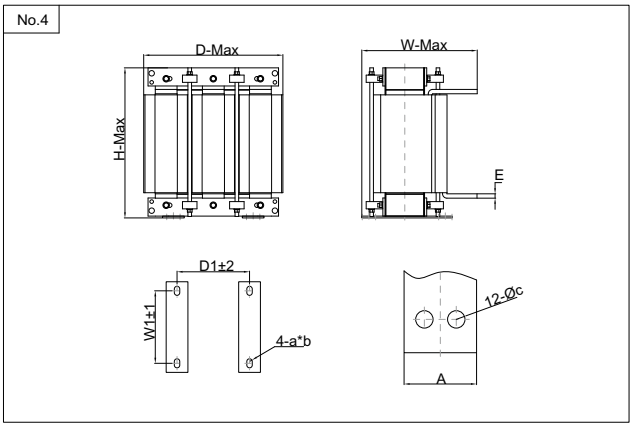

Corresponding Selection Table

	(A)	(kW)							(kg)
Filter Model	Rated Current @ 40°C	Power	Overall Dimensions	D*W*H(mm)	D1/D2*W1(mm)	A*B(mm)	C(mm)	A*E(mm)	Weight
XD6KA-44TC-0010-1M40	10	3.7	No.1	115*95*135	90/50*68	6*12	/	/	2.8
XD6KA-44TC-0015-0M94	15	5.5	No.1	115*95*135	90/50*68	6*12	/	/	3
XD6KA-44TC-0020-0M70	20	7.5	No.1	115*95*135	90/50*68	6*12	/	/	3.5
XD6KA-44TC-0030-0M47	30	11	No.2	150*115*135	95/50*76	6*15	6*Ø6	15*1.5	6.5
XD6KA-44TC-0040-0M36	40	15	No.2	150*115*135	95/50*76	6*15	6*Ø6	15*1.5	6.5
XD6KA-44TC-0050-0M28	50	18.5	No.2	150*115*135	120/64*72	9*20	6*Ø6	15*1.5	7.5
XD6KA-44TC-0060-0M24	60	22	No.2	195*115*155	120/64*72	9*20	6*Ø6	15*1.5	7.5
XD6KA-44TC-0080-0M18	80	30	No.2	195*125*155	120/64*78	9*20	6*Ø6	15*1.5	10.5
XD6KA-44TC-0090-0M16	90	37	No.2	195*125*155	120/64*78	9*20	6*Ø6	15*1.5	10.5
XD6KA-44TC-0120-0M12	120	45	No.3	230*160*210	150/72*91	11*18	6*Ø11	25.*4	15
XD6KA-44TC-0150-094U	150	55	No.3	230*160*210	150/72*91	11*18	6*Ø11	25.*4	15
XD6KA-44TC-0200-070U	200	75	No.3	230*160*240	150/72*91	11*18	6*Ø11	25.*4	23
XD6KA-44TC-0250-056U	250	110	No.3	230*180*240	150/72*106	11*18	6*Ø12	30.*5	25
XD6KA-44TC-0290-048U	290	132	No.3	230*180*240	150/72*106	11*18	6*Ø12	30.*5	26
XD6KA-44TC-0330-042U	330	160	No.3	290*200*265	214/95*107	11*18	6*Ø12	30.*5	28
XD6KA-44TC-0390-036U	390	185	No.3	290*200*265	214/95*107	11*18	6*Ø12	30.*5	28
XD6KA-44TC-0490-028U	490	220	No.3	290*215*305	214/95*107	11*18	12*Ø12	50*6	35
XD6KA-44TC-0600-024U	600	280	No.3	320*255*320	243/105*120	12*20	12*Ø12	50*6	55
XD6KA-44TC-0660-022U	660	300	No.3	320*225*320	243/105*120	12*20	12*Ø12	50*6	55
XD6KA-44TC-0800-17U5	800	380	No.4	385*290*380	200*200	15*25	12*Ø12	60*10	65
XD6KA-44TC-1000-014U	1000	450	No.4	385*290*380	200*200	15*25	12*Ø12	60*10	70
XD6KA-44TC-1200-11U7	1200	550	No.4	385*300*420	200*200	15*25	12*Ø12	60*10	90
XD6KA-44TC-1600-08U6	1600	630	No.4	385*300*420	200*200	15*25	12*Ø12	60*10	100

※ Precautions | High leakage current, must be grounded first.

The above parameters are for reference only. Please contact us for model selection and customized products.

AC Output Reactor OCL

- The IGBT drive unit generates peak output voltages at motor terminals that are much higher than the intermediate DC link voltage. Such peak voltages with high dv/dt impose extra stress on the insulation of motors and motor cables. The output reactor can limit the dv/dt at motor terminals to 2500V/μs during operation.



mplementation Standard China :

- **GB/T 19212.1-2016**
- **GB/T 19212.21-2014**
- **GB/T 1094.6-2011**

Service Environment

The rated performance remains unchanged at -10°C to +45°C. The maximum ambient temperature can reach +55°C. Above 45°C, the rated current decreases by 2% for every 1°C rise. The altitude shall not exceed 2000 meters.Operating ambient temperature: -25°C ~ +45°C, relative humidity no more than 90%. No harmful gas, flammable or explosive substances on site.Good ventilation is required for the surrounding environment. Additional ventilation equipment shall be installed if mounted inside cabinets.

Application Scope

- Reduce operating motor noise and eddy current loss.
- Cut down motor earth leakage current caused by input high-order harmonics.
- Smooth waveform filtering, suppress instantaneous voltage change dv/dt and extend motor service life.
- Protect internal power switching devices of frequency converters.
- Eliminate interference generated by contactor switching
- between inverter and motor.
- Limit overvoltage at motor terminals to 1150~460V AC (rms). Typical filtering performance:: du/dt ⩽ 1500V/us,Upeak ⩽ 1200V/us, dudt ⩽ 2500V/us

Model Selection

XD6KO	44	–	T	–	C	–	-0010	–	0M70
Series Code	Working Voltage		Number of Phases		Specifications		Operating Current		Rated Inductance
	44 : 440V 22 : 220V 68 : 680V 110:1140V 120 : 1200V		T :Three-phase S :Single-phase		C :Copper A :Aluminum		0010 :10 1600 :1600		M :mH U :uH

Technical Specifications

Rated Voltage	440V AC 50/60Hz	Insulation Class	Class F/H
Rated Current	10-1600A	Voltage Drop	Less than 4%. Exceeding this range will cause torque loss.
IP Rating	IP00~IP22	Noise	≤ 65dB
Maximum Current	1.5 times rated current for 60 seconds continuously	Dielectric Strength	Between iron core and winding: 3000V AC, 50Hz, 5mA, 10s, no flashover or breakdown (factory test)
Temperature Rise	⩽ 85K	Insulation Resistance	⩾ 100MΩ, 1000V DC
Carrier Frequency	2~8kHz		

Circuit Structure Diagram

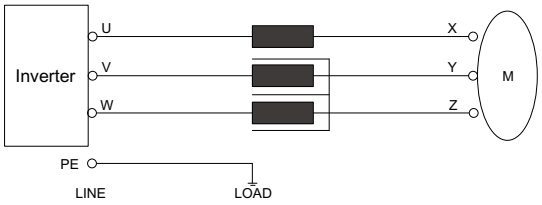

Appearance and Dimensions

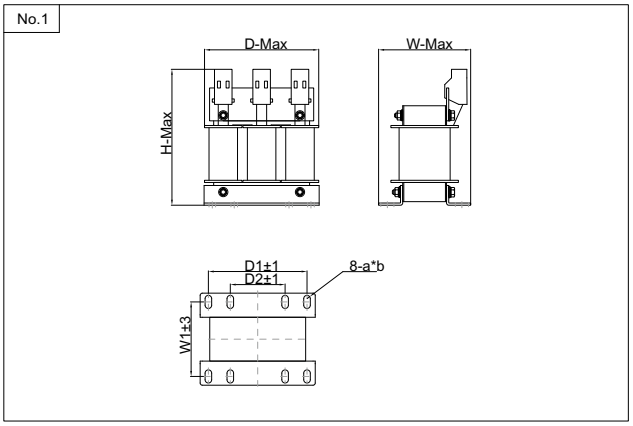

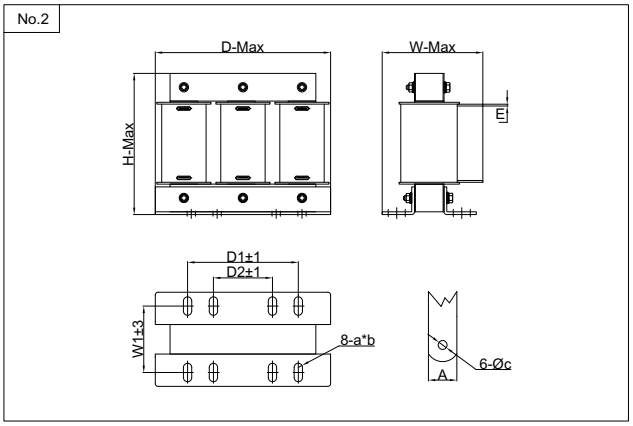

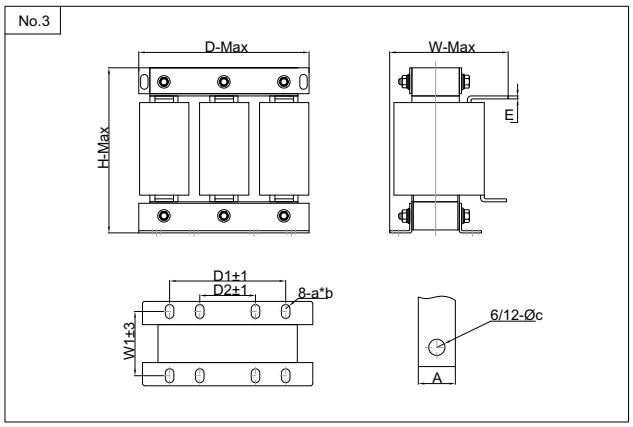

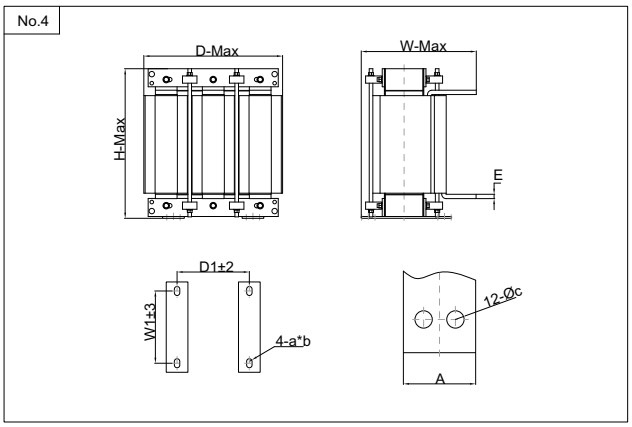

Corresponding Selection Table

	(A)	(kW)							(kg)
Filter Model	Rated Current @ 40°C	Power	Overall Dimensions	D*W*H(mm)	D1/D2*W1(mm)	A*B(mm)	C(mm)	A*E(mm)	Weight
XD6KO-44TC-0010-1M70	10	3.7	No.1	115*95*135	90/50*68	6*12	/	/	2.8
XD6KO-44TC-0015-0M47	15	5.5	No.1	115*95*135	90/50*68	6*12	/	/	3
XD6KO-44TC-0020-0M35	20	7.5	No.1	115*95*135	90/50*68	6*12	/	/	3.5
XD6KO-44TC-0030-0M23	30	11	No.2	150*115*135	95/50*76	6*15	6*Ø6	15*1.5	6.5
XD6KO-44TC-0040-0M18	40	15	No.2	150*115*135	95/50*76	6*15	6*Ø6	15*1.5	6.5
XD6KO-44TC-0050-0M14	50	18.5	No.2	150*115*135	120/64*72	9*20	6*Ø6	15*1.5	7.5
XD6KO-44TC-0060-0M12	60	22	No.2	195*115*155	120/64*72	9*20	6*Ø6	15*1.5	7.5
XD6KO-44TC-0080-087U	80	30	No.2	195*125*155	120/64*78	9*20	6*Ø6	15*1.5	10.5
XD6KO-44TC-0090-078U	90	37	No.2	195*125*155	120/64*78	9*20	6*Ø6	15*1.5	10.5
XD6KO-44TC-0120-058U	120	45	No.3	230*160*210	150/72*91	11*18	6*Ø11	25.*4	15
XD6KO-44TC-0150-047U	150	55	No.3	230*160*210	150/72*91	11*18	6*Ø11	25.*4	15
XD6KO-44TC-0200-035U	200	75	No.3	230*160*240	150/72*91	11*18	6*Ø11	25.*4	23
XD6KO-44TC-0250-027U	250	110	No.3	230*180*240	150/72*106	11*18	6*Ø12	30.*5	25
XD6KO-44TC-0290-024U	290	132	No.3	230*180*240	150/72*106	11*18	6*Ø12	30.*5	26
XD6KO-44TC-0330-021U	330	160	No.3	290*200*265	214/95*107	11*18	6*Ø12	30.*5	28
XD6KO-44TC-0390-018U	390	185	No.3	290*200*265	214/95*107	11*18	6*Ø12	30.*5	28
XD6KO-44TC-0490-014U	490	220	No.3	290*215*305	214/95*107	11*18	12*Ø12	50*6	35
XD6KO-44TC-0600-012U	600	280	No.3	320*255*320	243/105*120	12*20	12*Ø12	50*6	55
XD6KO-44TC-0660-011U	660	300	No.3	320*225*320	243/105*120	12*20	12*Ø12	50*6	55
XD6KO-44TC-0800-08U7	800	380	No.4	385*290*380	200*200	15*25	12*Ø12	60*10	65
XD6KO-44TC-1000-07U0	1000	450	No.4	385*290*380	200*200	15*25	12*Ø12	60*10	70
XD6KO-44TC-1200-05U8	1200	550	No.4	385*300*420	200*200	15*25	12*Ø12	60*10	90
XD6KO-44TC-1600-04U3	1600	630	No.4	385*300*420	200*200	15*25	12*Ø12	60*10	100

※ Precautions | High leakage current, must be grounded first.

The above parameters are for reference only. Please contact us for model selection and customized products.

DC Reactor (DCL)

- DC reactors are mainly applied on the DC side of converters, through which DC current containing AC components flows. Their core functions are to limit the AC components superimposed on DC current within specified values, maintain continuous rectified current, reduce current ripple and improve input power factor.

Operating Environment

Operating ambient temperature: -25℃ ~ +45℃, relative humidity ⩽ 90%.No harmful gases, flammable or explosive substances in the surrounding area. Good ventilation is required; additional ventilation equipment shall be equipped if installed inside cabinets.

Application Scope

- Improve input current waveform distortion caused by capacitive filtering.
- Prevent rectifier bridge damage and capacitor overheating caused by inrush current.
- Enhance power factor and reduce AC pulses on DC bus.
- Limit transient fluctuations of grid voltage.
- Ensure safe operation of inverters and other electrical equipment, and protect them from harmonic interference.
- Suppress and filter DC ripples together with parallel capacitors to eliminate adverse impacts on loads.

mplementation Standard China :

- **GB/T 19212.1-2016**
- **GB/T 19212.21-2014**
- **GB/T 1094.6-2011**



Model Selection

XD6KD	44	–	T	–	C	–	-0010	–	0M70
Series Code	Working Voltage 44 : 440V 22 : 220V 68 : 680V 110 : 1140V 120 : 1200V		Number of Phases T : Three-phase S : Single-phase		Specifications C : Copper A : Aluminum		Operating Current 0010 : 10 1600 : 1600		Rated Inductance M : mH U : uH

Technical Specifications

Rated Voltage	~1000V DC	Insulation Class	Class F/H
Rated Current	10-1200A	Voltage Drop	Less than 4%. Exceeding this range will result in torque loss.
	IP00~IP22	Noise	⩽ 65dB
Maximum Current	1.5 times rated current for continuous 60 seconds	Dielectric Strength	Between core and winding: 3000V AC, 50Hz, 5mA, 10s, no flashover and breakdown (Factory Test)
Temperature Rise	⩽ 85K	Insulation Resistance	⩾ 100MΩ, 1000V DC
Carrier Frequency	⩽2000m		

Circuit Structure Diagram

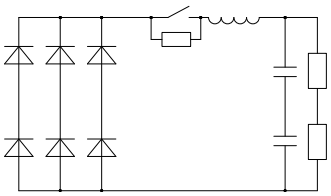

Appearance and Dimensions

No.1

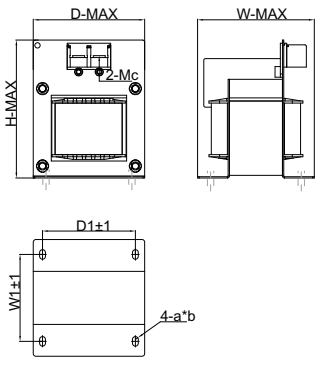

No.2

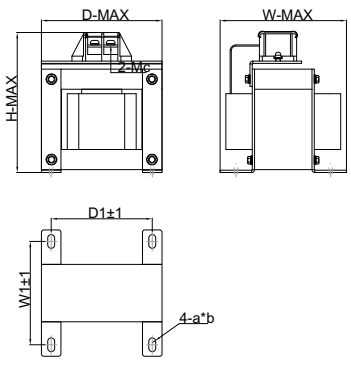

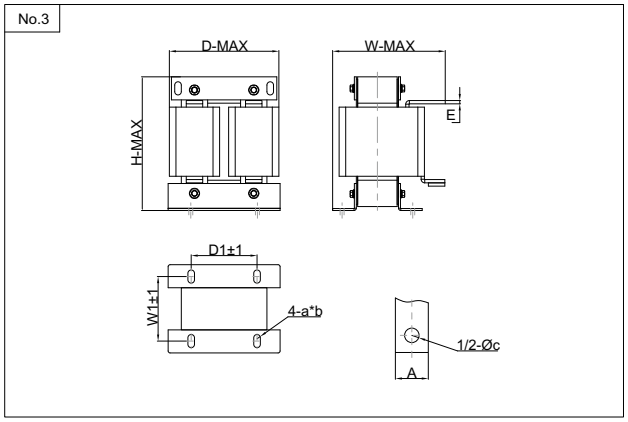

Corresponding Selection Table

	(A)	(kW)							(kg)
Filter Model	Rated Current @ 40°C	Power	Overall Dimensions	D*W*H(mm)	D1*W1(mm)	A*B(mm)	C(mm)	A*E(mm)	Weight
XD6KD-44TC-0010-6M30	10	4	No.1	105*120*135	88*90	6*12	2-M5	/	4
XD6KD-44TC-0015-3M60	15	5.5	No.1	105*120*135	88*90	6*12	2-M5	/	4
XD6KD-44TC-0020-3M60	20	7.5	No.1	105*120*135	88*90	6*12	2-M5	/	4.5
XD6KD-44TC-0030-2M00	30	11	No.1	105*120*135	88*90	6*12	2-M5	/	4.5
XD6KD-44TC-0040-1M30	40	15	No.1	105*120*135	88*90	6*12	2-M5	/	5
XD6KD-44TC-0040-2M00	40	18.5	No.1	105*120*135	88*90	6*12	2-M5	/	5
XD6KD-44TC-0050-1M08	50	22	No.1	115*135*150	95*110	6*12	2-M5	/	7
XD6KD-44TC-0065-0M80	65	30	No.1	135*150*180	111*110	8*14	2-M6	/	7.5
XD6KD-44TC-0080-0M70	80	37	No.1	135*150*180	111*110	8*14	2-M6	/	8
XD6KD-44TC-0100-0M54	100	45	No.2	150*180*195	125*115	10*20	2-M6	/	10
XD6KD-44TC-0120-0M45	120	55	No.2	150*180*195	125*115	10*20	2-M6	/	10
XD6KD-44TC-0160-0M45	160	75	No.2	150*180*195	125*125	10*20	2-M6	25.*4	12
XD6KD-44TC-0200-0M33	200	90	No.3	170*180*215	100*98	11*18	Ø11	25.*4	15
XD6KD-44TC-0250-0M26	250	110	No.3	210*200*255	175*115	11*18	Ø11	30.*5	22
XD6KD-44TC-0300-0M26	300	132	No.3	210*200*255	175*115	11*18	Ø11	30.*5	25
XD6KD-44TC-0350-0M17	350	160	No.3	210*200*255	175*115	11*18	Ø11	30.*5	25
XD6KD-44TC-0450-090U	450	185	No.3	220*220*280	190*117	11*18	2-Ø12	50.*6	28
XD6KD-44TC-0500-060U	500	220	No.3	220*220*280	190*117	11*18	2-Ø12	50*6	30
XD6KD-44TC-0650-050U	650	280	No.3	220*240*280	190*127	11*18	2-Ø12	50*6	32
XD6KD-44TC-0800-050U	800	33/400	No.4	250*260*320	200*144	11*18	2-Ø12	60*10	45
XD6KD-44TC-1000-050U	1000	450	No.4	250*280*360	200*144	11*18	2-Ø12	60*10	50
XD6KD-44TC-1200-050U	1200	550	No.4	250*280*390	200*164	11*18	2-Ø12	60*10	65

※ Precautions | High leakage current, must be grounded first.

The above parameters are for reference only. Please contact us for model selection and customized products.