BALSEAL

Solid State Relay

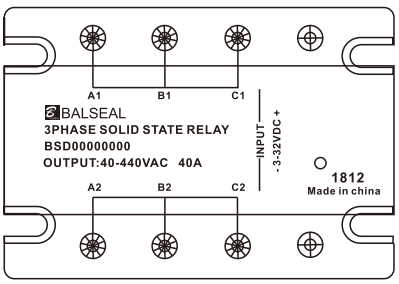

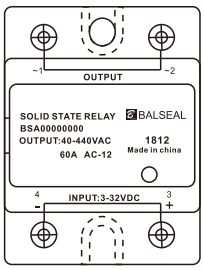

Product Selection Manual

Create more for you

BALSEAL

BS series solid-state relays

Solid State Relay

- The advantages of solid-state relays (SSRs) compared to electromechanical relays (EMRs) are well-known: SSRs are entirely electronic products with no moving parts inside; they are noiseless, can withstand significant vibration, have no operational problems, offer faster response times, and most have a long service life.
- Under proper conditions, SSRs have a virtually unlimited lifespan compared to the 100,000-day lifespan of EMRs. Due to their virtually unlimited lifespan, SSRs eliminate the need for maintenance and prevention of unexpected machine downtime for manufacturers, a significant advantage in 24-hour industrial operations.

The main application

Heating systems

Injection molding machines; Furnaces; Power supply and distribution systems; Air conditioning; Textile machinery; Household heaters; Infrared heating; Thermoforming dryers; etc.



Lighting

Public lighting

Cinema lighting

Theater lighting

Airport runway lighting

Street lighting

etc...

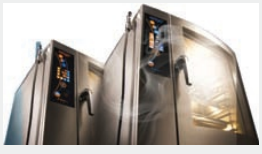

Control

PLC interface

Heating element control

Solenoid valve

Contactor coil

Sensor optocoupler

etc...



Other applications

Transformer starting,

Power factor correction,

Uninterruptible power supplies, Power switches,

Capacitor control,

etc.



Solid State Relay

- Long service life
- Quiet operation
- Minimum electrical noise
- Low power consumption
- Shock and vibration resistant
- Electromagnetic interference immunity
- Suitable for harsh environments
- High compatibility with various control systems
- Fast switching
- Position insensitive
- Lightweight
- Reduced energy costs

Why use solid-state switching technology?

From design to manufacturing

We control the entire industry chain: design, development, production, testing, and sales.

We offer the most complete range of relays and also develop our own production equipment to ensure the most efficient production methods. We produce high-capacity and unique molds. As a result, BALSEAL products are distributed globally, and the company has become a recognized and renowned industrial enterprise.





High-quality products

We maintain the highest product quality at all times using specialized testing equipment developed in-house.

BALSEAL solid-state relays are manufactured in accordance with major international standards.

BSA AC output Series



Single Phase AC Solid State Relays

SSR 10 - 120Amp

- Input 4 to 32VDC or 90 to 250VAC
- Flip-type bolt protection makes maintenance easier.
- LED input status indicator
- AC/DC control optional
- Certifications: CE, RoHS

Industry applications:

It is widely used in automation fields such as lighting control, heating control, office appliances, and fire protection systems. It is suitable for extreme and harsh environments such as chemical, coal mining, and ceramic industries that require explosion-proof, dust-proof, and corrosion-proof features.

Output parameters	10A	15A	20A	25A	30A	40A	60A
Rated load voltage	24:24~240VAC 44:40~440VAC	24:24~240VAC 44:40~440VAC	24:24~240VAC 44:40~440VAC	24:24~240VAC 44:40~440VAC	24:24~240VAC 44:40~440VAC	24:24~240VAC 44:40~440VAC	24:24~240VAC 44:40~440VAC
Rated load current	10A	15A	20A	25A	30A	40A	60A
Transient peak withstand voltage	24:600VAC 44:900VAC	24:600VAC 44:900VAC	24:600VAC 44:900VAC	24:600VAC 44:900VAC	24:600VAC 44:900VAC	24:600VAC 44:900VAC	24:600VAC 44:900VAC
Off-state leakage current	AC ≤10mA	AC ≤10mA	AC ≤10mA	AC ≤10mA	AC ≤10mA	AC ≤10mA	AC ≤10mA
On-state pressure drop	AC ≤10mA	AC ≤10mA	AC ≤10mA	AC ≤10mA	AC ≤10mA	AC ≤10mA	AC ≤10mA
On-off time	≤10ms	≤10ms	≤10ms	≤10ms	≤10ms	≤10ms	≤10ms

Output parameters	80A	100A	120A
Rated load voltage	24:24~240VAC 44:40~440VAC	24:24~240VAC 44:40~440VAC	24:24~240VAC 44:40~440VAC
Rated load current	80A	100A	120A
Transient peak withstand voltage	24:600VAC 44:900VAC	24:600VAC 44:900VAC	24:600VAC 44:900VAC
Off-state leakage current	AC ≤10mA	AC ≤10mA	AC ≤10mA
On-state pressure drop	AC ≤10mA	AC ≤10mA	AC ≤10mA
On-off time	≤10ms	≤10ms	≤10ms

Input parameters

Input voltage range	DC 3~32VDC	AC 90~250VAC
Reverse voltage	DC 32VDC	/
Input current range	DC 6~25mA	AC 5~30mA
Ensure the voltage is on.	DC 3VDC	AC 90VAC
Ensure shutdown voltage	DC 1.5VDC	AC 10VAC

Other parameters

Medium pressure resistance	≥2500VAC
Insulation resistance	500MΩ 500VDC
Safety regulations for casing materials	UL94-V0
Substrate material	aluminum
working temperature	-30℃~80℃
storage temperature	-30℃~125℃
Maximum working humidity	85% No condensation
Installation method	No condensation
weight	90~105g

Important Notes:

(A) All parameters are for 25°C unless otherwise specified.
(B) A heatsink must be installed for loads above 10A.
(C) Fan cooling or water cooling is required for temperatures above 80°C.

For more information, please contact your reseller.

Model listing

Valid product listings

BSA	40	44	D	032	Z
Series code	Rated load current	Rated load voltage	Input signal type	input voltage	Trigger mode
	10: 10A 15: 15A 20: 20A 25: 25A 30: 30A 40: 40A 60: 60A 80: 80A 100: 100A 120: 120A	24:24—240VAC 44:40—440VAC	D:DC A:AC	032: 3-32VDC 250: 90-250VAC	Z: N conduction Default:none

Wiring diagram

BSA AC output Series

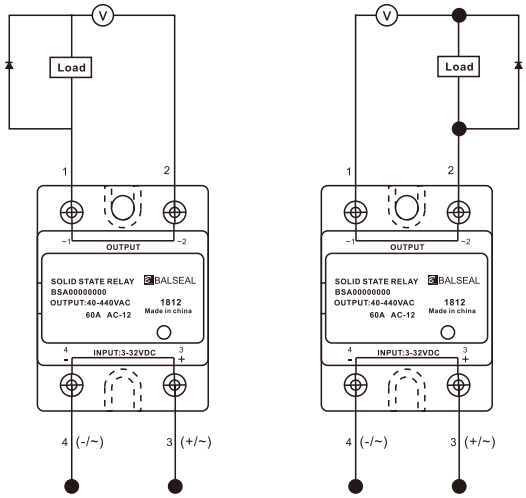

Mechanical dimensions

BSA AC output Series

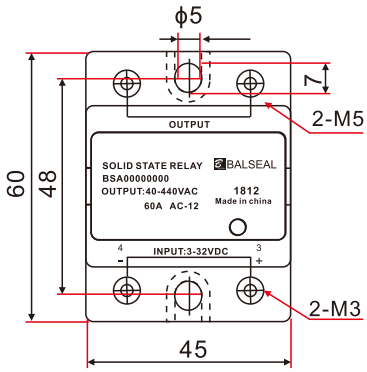

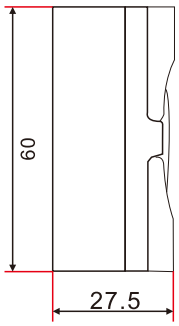

Wiring diagram

BSA AC output Series

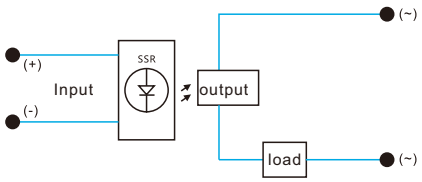

DC controlled AC

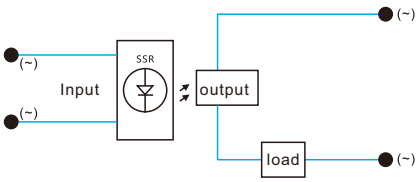

AC controlled AC

BSC DC output Series



Single Phase DC Solid State Relays

SSR 10 - 40Amp

- Rated load current 10A to 40A
- Flip-type bolt protection makes maintenance easier.
- LED input status indicator
- AC/DC control optional
- Certifications: CE, RoHS

Industry applications:

It is widely used in automation fields such as lighting control, heating control, office appliances, and fire protection systems. It is suitable for extreme and harsh environments such as chemical, coal mining, and ceramic industries that require explosion-proof, dust-proof, and corrosion-proof features.

Output parameters	10A	15A	20A	25A	30A	40A
Rated load voltage	12:12~250VDC	12:12~250VDC	12:12~250VDC	12:12~250VDC	12:12~250VDC	12:12~250VDC
Rated load current	10A	15A	20A	25A	30A	40A
Transient peak withstand voltage	12:400VDC	12:400VDC	12:400VDC	12:400VDC	12:400VDC	12:400VDC
Off-state leakage current	DC ≤5mA	DC ≤5mA	DC ≤5mA	DC ≤5mA	DC ≤5mA	DC ≤5mA
On-state pressure drop	DC ≤1.2VDC	DC ≤1.2VDC	DC ≤1.2VDC	DC ≤1.2VDC	DC ≤1.2VDC	DC ≤1.2VDC
On-off time	≤5ms	≤5ms	≤5ms	≤5ms	≤5ms	≤5ms

Input parameters	10A	15A	20A	25A	30A	40A
Input voltage range	DC 3~32VDC	DC 3~32VDC	DC 3~32VDC	DC 3~32VDC	DC 3~32VDC	DC 3~32VDC
Reverse voltage	DC 32VDC	DC 32VDC	DC 32VDC	DC 32VDC	DC 32VDC	DC 32VDC
Input current range	DC 6~25mA	DC 6~25mA	DC 6~25mA	DC 6~25mA	DC 6~25mA	DC 6~25mA
Ensure the voltage is on.	DC 3VDC	DC 3VDC	DC 3VDC	DC 3VDC	DC 3VDC	DC 3VDC
Ensure shutdown voltage	DC 3VDC	DC 3VDC	DC 3VDC	DC 3VDC	DC 3VDC	DC 3VDC
Starting current	≤7mA	≤7mA	≤7mA	≤7mA	≤7mA	≤7mA

Other parameters	
Medium pressure resistance	≥2500VAC
Insulation resistance	500MΩ 500VDC
Safety regulations for casing materials	UL94-V0
Substrate material	aluminum
working temperature	-30℃~80℃
storage temperature	-30℃~125℃
Maximum working humidity	85% No condensation
Installation method	No condensation
weight	90~105g

Important Notes:

(A) All parameters are for 25°C unless otherwise specified.
(B) A heatsink must be installed for loads above 10A.
(C) Fan cooling or water cooling is required for temperatures above 80°C.

For more information, please contact your reseller.

Model listing

Valid product listings

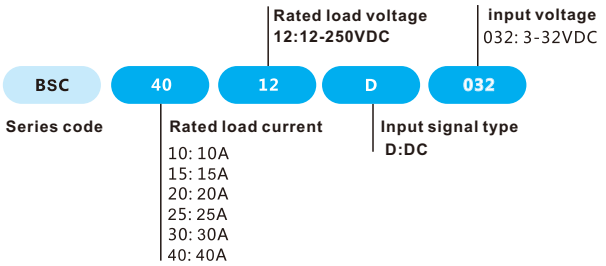

Wiring diagram

BSC DC output Series

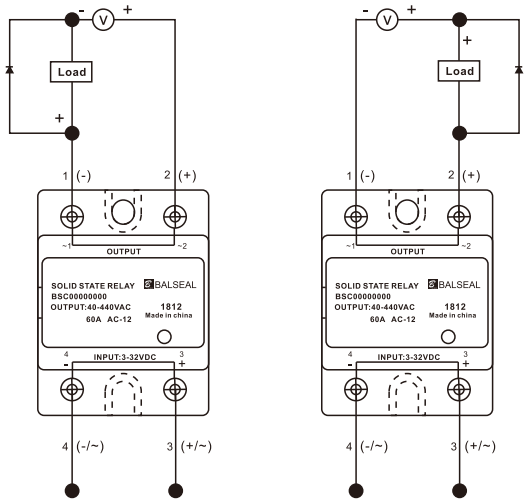

Mechanical dimensions

BSC output Series

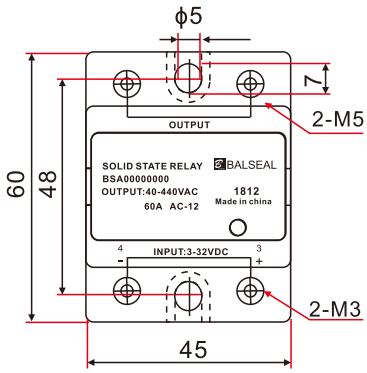

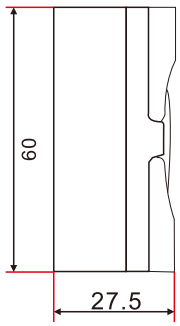

Wiring diagram

BSC output Series

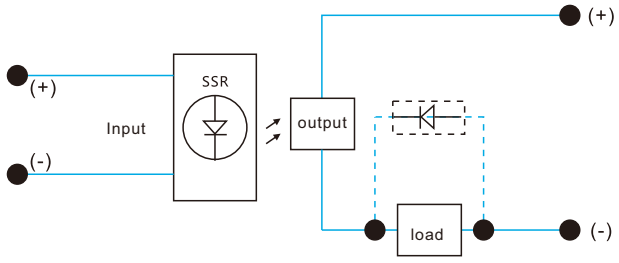

DC controlled DC

BSD AC output Series

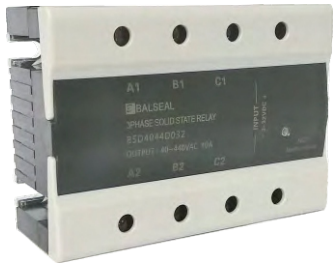

3PH AC solid-state relay

SSR 10 - 120Amp

- Input 4 to 32VDC or 90 to 250VAC
- Flip-type bolt protection makes maintenance easier.
- LED input status indicator
- AC/DC control optional
- Certifications: CE, RoHS

Industry applications:

It is widely used in automation fields such as lighting control, heating control, office appliances, and fire protection systems. It is suitable for extreme and harsh environments such as chemical, coal mining, and ceramic industries that require explosion-proof, dust-proof, and corrosion-proof features.

Output parameters	10A	15A	20A	25A	30A	40A	60A
Rated load voltage	24:24~240VAC 44:40~440VAC	24:24~240VAC 44:40~440VAC	24:24~240VAC 44:40~440VAC	24:24~240VAC 44:40~440VAC	24:24~240VAC 44:40~440VAC	24:24~240VAC 44:40~440VAC	24:24~240VAC 44:40~440VAC
Rated load current	10A	15A	20A	25A	30A	40A	60A
Transient peak withstand voltage	24:600VAC 44:900VAC	24:600VAC 44:900VAC	24:600VAC 44:900VAC	24:600VAC 44:900VAC	24:600VAC 44:900VAC	24:600VAC 44:900VAC	24:600VAC 44:900VAC
Off-state leakage current	AC ≤10mA	AC ≤10mA	AC ≤10mA	AC ≤10mA	AC ≤10mA	AC ≤10mA	AC ≤10mA
On-state pressure drop	AC ≤1.5VAC	AC ≤1.5VAC	AC ≤1.5VAC	AC ≤1.5VAC	AC ≤1.5VAC	AC ≤1.5VAC	AC ≤1.5VAC
On-off time	≤10ms	≤10ms	≤10ms	≤10ms	≤10ms	≤10ms	≤10ms

Output parameters	80A	100A	120A
Rated load voltage	24:24~240VAC 44:40~440VAC	24:24~240VAC 44:40~440VAC	24:24~240VAC 44:40~440VAC
Rated load current	80A	100A	120A
Transient peak withstand voltage	24:600VAC 44:900VAC	24:600VAC 44:900VAC	24:600VAC 44:900VAC
Off-state leakage current	AC ≤10mA	AC ≤10mA	AC ≤10mA
On-state pressure drop	AC ≤1.5VAC	AC ≤1.5VAC	AC ≤1.5VAC
On-off time	≤10ms	≤10ms	≤10ms

Input parameters	
Input voltage range	DC 3~32VDC AC 90~250VAC
Reverse voltage	DC 32VDC
Input current range	DC 6~25mA AC 5~30mA
Ensure the voltage is on.	DC 3VDC AC 90VAC
Ensure shutdown voltage	DC 1.5VDC AC 10VAC

Other parameters	
Medium pressure resistance	≥2500VAC
Insulation resistance	500MΩ 500VDC
Safety regulations for casing materials	UL94-V0
Substrate material	aluminum
working temperature	-30℃~80℃
storage temperature	-30℃~125℃
Maximum working humidity	85% No condensation
Installation method	No condensation
weight	90~105g

Important Notes:

(A) All parameters are for 25°C unless otherwise specified.
(B) A heatsink must be installed for loads above 10A.
(C) Fan cooling or water cooling is required for temperatures above 80°C.

For more information, please contact your reseller.

Model listing

Valid product listings

BSD	40	44	D	032	Z
Series code	Rated load current	Rated load voltage	Input signal type	input voltage	Trigger mode

Rated load current
10: 10A
15: 15A
20: 20A
25: 25A
30: 30A
40: 40A
60: 60A
80: 80A
100: 100A
120: 120A

Rated load voltage
44:40—440VAC

Input signal type
D:DC
A:AC

input voltage
032: 3-32VDC
250: 90-250VAC

Trigger mode
Z: N conduction
Default:none

Wiring diagram

BSD AC output Series

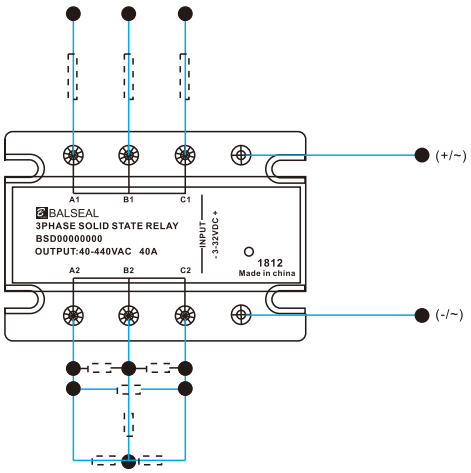

Mechanical dimensions

BSD AC output Series

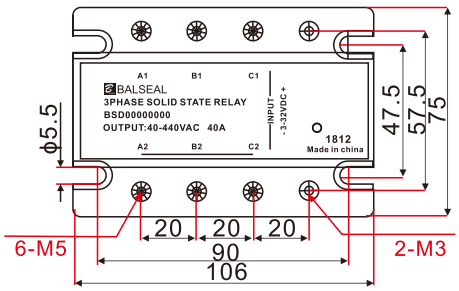

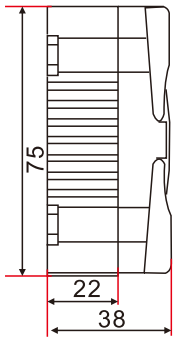

Wiring diagram

BSD AC output Series

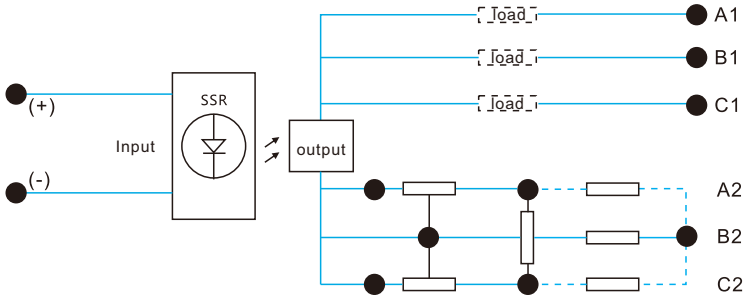

DC controlled AC

BSAP **Series ultra-thin SSR**



BSAP series DIN-mount solid-state relays

SSR 10 - 80Amp

- Ultra-thin, with a width of only 24.5mm.
- 10-80A Multiple Power Options
- LED input status indicator
- Built-in RC snubber
- Insulation withstand voltage up to 4000V
- Certifications: CE, RoHS

Industry applications:

Especially suitable for harsh environments such as corrosive, humid, dust-proof, and explosion-proof conditions, as well as applications requiring frequent switching, it is a replacement product for AC contactors.

Output parameters	10A	25A	40A	50A	60A	80A
Rated load voltage	AC 24-480V	AC 24-480V	AC 24-480V	AC 24-480V	AC 24-480V	AC 24-480V
Rated load current	10A	25A	40A	50A	60A	80A
Transient peak withstand voltage	800VAC	800VAC	800VAC	800VAC	800VAC	800VAC
Off-state leakage current	AC ≤2mA	AC ≤2mA	AC ≤2mA	AC ≤2mA	AC ≤10mA	AC ≤10mA
On-state pressure drop	≤1.5V	≤1.5V	≤1.5V	≤1.5V	≤1.5V	≤1.5V
On-off time	⩽10ms	⩽10ms	⩽10ms	⩽10ms	⩽10ms	⩽10ms

Input parameters		
Input voltage range	DC 3~32VDC	AC 70~480VAC
Maximum input current	DC 12mA	AC 15mA
Ensure the voltage is on.	DC 2.8VDC	AC 70VAC
Ensure shutdown voltage	DC 1.5VDC	AC 50VAC

Other parameters	
Medium pressure resistance	⩾2500VAC
Insulation voltage	4000V
Safety regulations for casing materials	UL94-V0
Substrate material	aluminum
working temperature	-20℃~80℃
storage temperature	-30℃~125℃
Maximum working humidity	85% No condensation
Installation method	Industrial DIN Install
sizeL-W-H(mm)	82.5*24.5*76.5(10A/25A/40A) 82.5*24.5*88.5(50A/60A/80A)
Certification	CE、RoHS

Precautions

(A)When selecting a relay, pay special attention to the load's operating current and ambient temperature. Sufficient heat sink or other effective heat dissipation measures are required when the load is operating.

(B)The heat generated by the relay during operation must be dissipated through the relay's metal base plate. During installation, ensure a tight fit between the relay and the heat sink, secure installation, and apply thermal grease to the mating surfaces.

(C)Loose connections between the output terminals and the load line can cause the product to burn out or be damaged due to heat generated during power-on.

(D)Recommended screw installation for product wiring: M4 screws with a torque of 0.98~1.37 N·m. Excessive torque will damage the relay.

For more information, please contact your distributor.

Model listing

Valid product listings

Rated load voltage
480: 24-480VAC
75: 3-75VDC

BSAP	10	440	D	032
Series code	Rated load current		Input signal type	input voltage
	10: 10A 25: 25A 40:40A 60:60A 80:80A		D:DC A:AC	032: 3-32VDC 280: 70-280VAC

Mechanical dimensions

Relay size

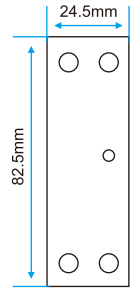

顶视图

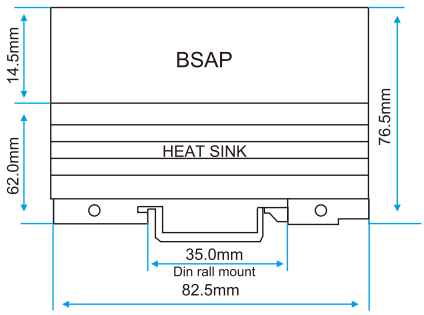

10A/25A/40A

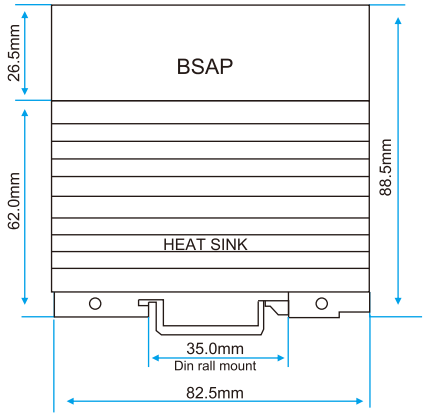

50A/60A/80A

Wiring diagram

BSAP Wiring And Wiring

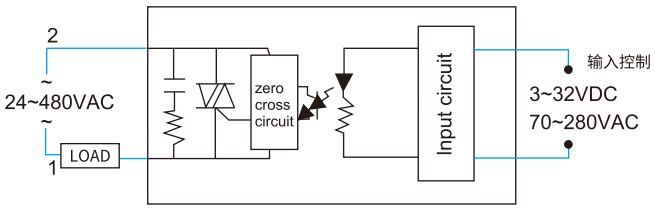

BALSEAL

BSX Single-Phase DC Output Solid State Relay and Heatsink

BSX DC output Series

SSR 10 - 40Amp

- Rated load current 10A to 40A
- Top-mounted bolt protection for easier maintenance
- Equipped with LED input status indicator
- AC/DC control optional
- CE 、 RoHS



- The BSX series solid-state relays feature a flame-retardant engineering plastic housing, epoxy resin potting, and threaded terminal connections. They boast high structural strength, impact resistance, vibration resistance, and low input drive current, facilitating easy interface with computer terminals and digital control circuits. They are widely used in automation control fields such as petrochemical equipment, pharmaceutical machinery, food processing machinery, packaging machinery, plastics machinery, CNC machine tools, and entertainment facilities.

- They are particularly suitable for harsh environments requiring corrosion, humidity, dust prevention, explosion protection, and frequent switching applications.

The main application

Heating systems

Injection molding machines; Furnaces; Power supply and distribution systems; Air conditioning; Textile machinery; Household heaters; Infrared heating; Thermoforming dryers; etc.



Lighting

Public lighting

Cinema lighting

Theater lighting

Airport runway lighting

Street lighting

etc...

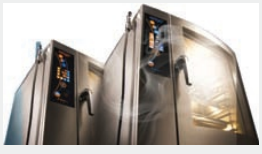

Control

PLC interface

Heating element control

Solenoid valve

Contactor coil

Sensor optocoupler

etc...



Other applications

Transformer starting,

Power factor correction,

Uninterruptible power supplies, Power switches,

Capacitor control,

etc.



Model listing

Valid product listings

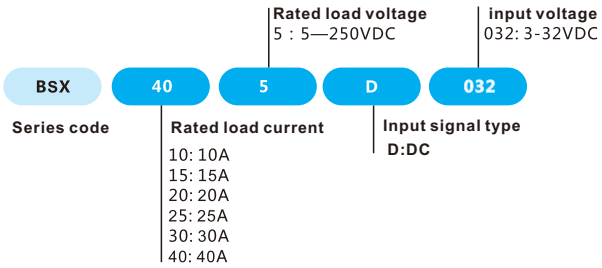

The main application

Output parameters	10A	15A	20A	25A	30A	40A
Rated load voltage	5:5~250VDC	5:5~250VDC	5:5~250VDC	5:5~250VDC	5:5~250VDC	5:5~250VDC
Rated load current	10A	15A	20A	25A	30A	40A
Transient peak withstand voltage	400VDC	400VDC	400VDC	400VDC	400VDC	400VDC
Off-state leakage current	DC ≤2mA	DC ≤2mA	DC ≤2mA	DC ≤2mA	DC ≤2mA	DC ≤5mA
On-state pressure drop	DC ≤1.5VDC	DC ≤1.5VDC	DC ≤1.5VDC	DC ≤1.5VDC	DC ≤1.5VDC	DC ≤1.5VDC
On-off time	≤10ms	≤10ms	≤10ms	≤10ms	≤10ms	≤10ms
Input voltage range	DC 3~32VDC	DC 3~32VDC	DC 3~32VDC	DC 3~32VDC	DC 3~32VDC	DC 3~32VDC
Control current	DC 4-12mA	DC 4-12mA	DC 4-12mA	DC 4-12mA	DC 4-12mA	DC 4-12mA
Power-off time	DC 4-12mA					

Other parameters

Medium pressure resistance	≥2500VAC
Insulation resistance	500MΩ 500VDC
Safety regulations for casing materials	UL94-V0
Substrate material	aluminum
working temperature	-30℃~80℃
storage temperature	-30℃~125℃
Maximum working humidity	85% No condensation
Installation method	No condensation
weight	90~105g

BSX**DC output Series**

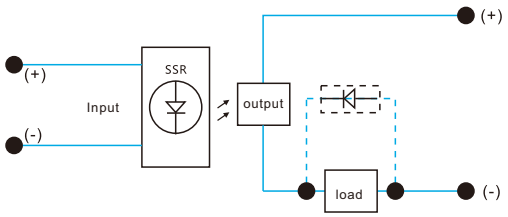

DC controlled DC

BSX **DC output Series**

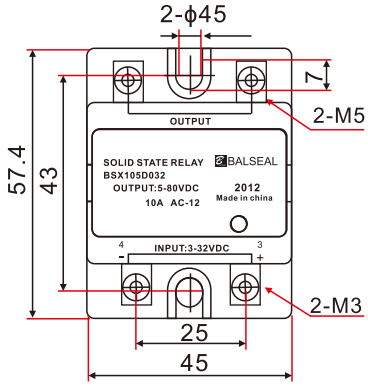

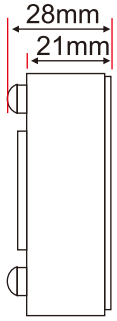

Precautions

Precautions: (A) All parameters are valid at 25°C unless otherwise specified.

(B) Loads of 10A-25A require a heatsink; loads above 40A require fan cooling or water cooling.

(C) Loads above 80°C require fan cooling or water cooling.

(D) When using inductive loads, be sure to connect a varistor in parallel at the output terminal, with a value of 1.6-1.9 times the load voltage.

For more information, please refer to the datasheet.

BALSEAL

BSA Single-phase AC Solid State Relay

BSS AC output Series

SSR 10 - 120Amp

- Rated load current 10A to 120A
- Top cover bolt protection for easier maintenance
- With LED input status indicator AC/DC control optional
- Compliant with CE and RoHS standards



- The BSS series relays feature a flame-retardant engineering plastic housing, epoxy resin potting, and threaded terminal connections. They boast high structural strength, impact resistance, strong anti-shutdown capability, and low input drive current, facilitating easy interface with computer terminals and digital security control circuits. They are widely evaluated in automation control applications across petrochemical instruments and equipment, pharmaceutical machinery, food processing machinery, packaging machinery, plastics machinery, CNC machine tools, and entertainment facilities.

- They are particularly suitable for corrosive, high-humidity environments, explosion-proof plasma environments, and switching applications.

The main application

Heating systems

Injection molding machines; Furnaces; Power supply and distribution systems; Air conditioning; Textile machinery; Household heaters; Infrared heating; Thermoforming dryers; etc.



Lighting

Public lighting

Cinema lighting

Theater lighting

Airport runway lighting

Street lighting

etc...

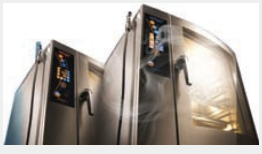

Control

PLC interface

Heating element control

Solenoid valve

Contactor coil

Sensor optocoupler

etc...



Other applications

Transformer starting,

Power factor correction,

Uninterruptible power supplies, Power switches,

Capacitor control,

etc.



Model listing

Valid product listings

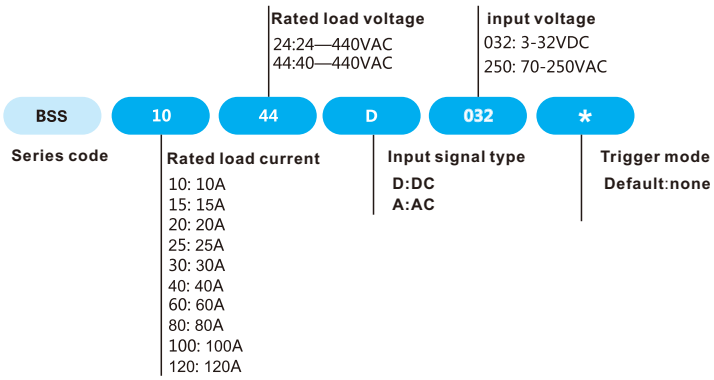

The main application

Output parameters	10A	15A	20A	25A	30A	40A
Rated load voltage	24:24~280VAC 44:40~480VAC	24:24~280VAC 44:40~480VAC	24:24~280VAC 44:40~480VAC	24:24~280VAC 44:40~480VAC	24:24~280VAC 44:40~480VAC	24:24~280VAC 44:40~480VAC
Rated load current	10A	15A	20A	25A	30A	40A
Transient peak withstand voltage	24:600VAC 44:900VAC	24:600VAC 44:900VAC	24:600VAC 44:900VAC	24:600VAC 44:900VAC	24:600VAC 44:900VAC	24:600VAC 44:900VAC
Off-state leakage current	AC ≤10mA	AC ≤10mA	AC ≤10mA	AC ≤10mA	AC ≤10mA	AC ≤10mA
On-state pressure drop	AC ≤1.5V	AC ≤1.5V	AC ≤1.5V	AC ≤1.5V	AC ≤1.5V	AC ≤1.5V
On-off time	AC ≤10mA	AC ≤10mA	AC ≤10mA	AC ≤10mA	AC ≤10mA	AC ≤10mA
Input voltage range	DC 3-32VDC	DC 3-32VDC	DC 3-32VDC	DC 3-32VDC	DC 3-32VDC	DC 3-32VDC
Control current	DC 4-25mA	DC 4-25mA	DC 4-25mA	DC 4-25mA	DC 4-25mA	DC 4-25mA
Power-off time	≤10ms	≤10ms	≤10ms	≤10ms	≤10ms	≤10ms

Output parameters	60A	80A	100A	120A
Rated load voltage	24:24~280VAC 44:40~480VAC	24:24~280VAC 44:40~480VAC	24:24~280VAC 44:40~480VAC	24:24~280VAC 44:40~480VAC
Rated load current	60A	80A	100A	120A
Transient peak withstand voltage	24:600VAC 44:900VAC	24:600VAC 44:900VAC	24:600VAC 44:900VAC	24:600VAC 44:900VAC
Off-state leakage current	AC ≤10mA	AC ≤10mA	AC ≤10mA	AC ≤10mA
On-state pressure drop	AC ≤1.5V	AC ≤1.5V	AC ≤1.5V	AC ≤1.5V
On-off time	AC ≤10mA	AC ≤10mA	AC ≤10mA	AC ≤10mA
Input voltage range	DC 3-32VDC	DC 3-32VDC	DC 3-32VDC	DC 3-32VDC
Control current	DC 4-25mA	DC 4-25mA	DC 4-25mA	DC 4-25mA
Power-off time	≤10ms	≤10ms	≤10ms	≤10ms

Other parameters

Medium pressure resistance	⩾2500VAC
Insulation voltage	4000V
Safety regulations for casing materials	UL94-V0
Substrate material	aluminum
working temperature	-20℃~70℃
storage temperature	-30℃~125℃
Maximum working humidity	85% No condensation
Installation method	Panel mounting
sizeL-W-H(mm)	43*12*27
Certification	CE

Line diagram BSS ACoutput Series

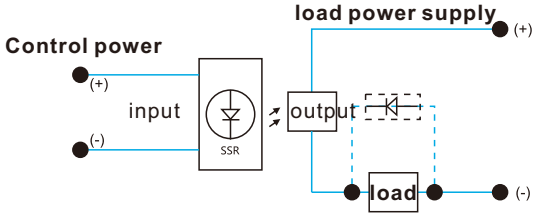

Appearance size BSS ACoutput Series

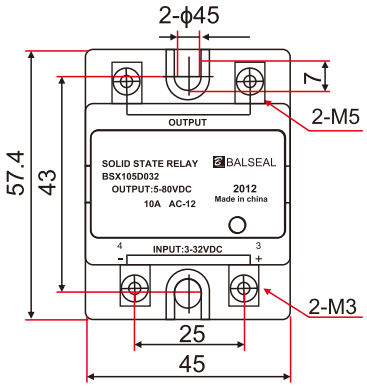

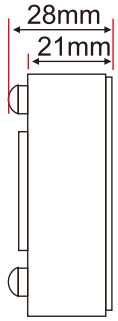

BSS AC temperature curve

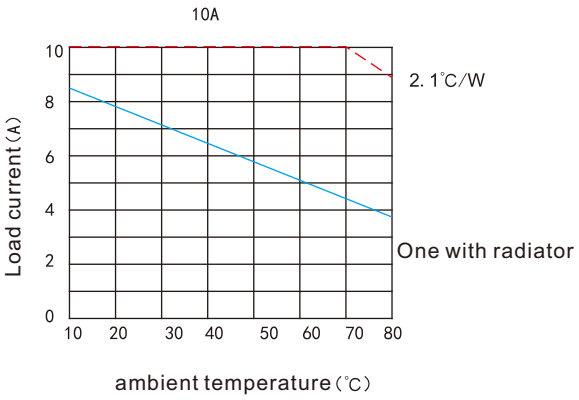

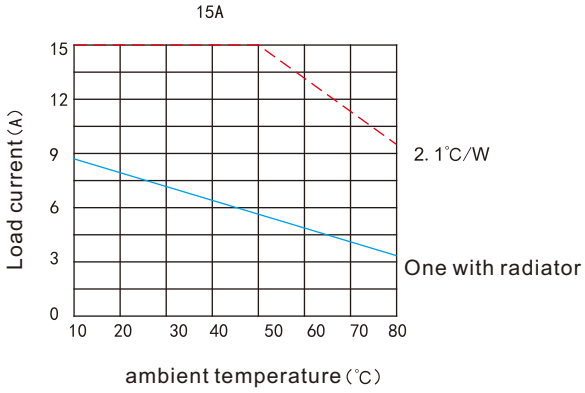

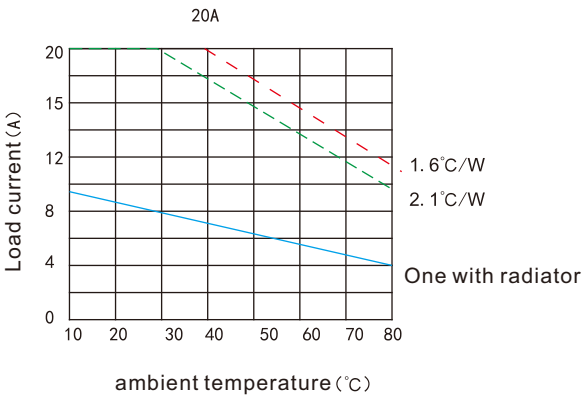

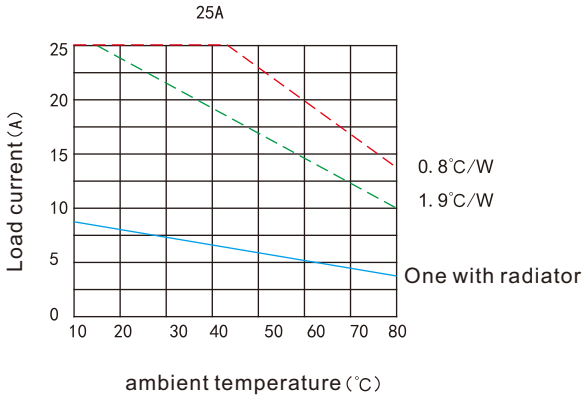

BSS **AC temperature curve**

40A

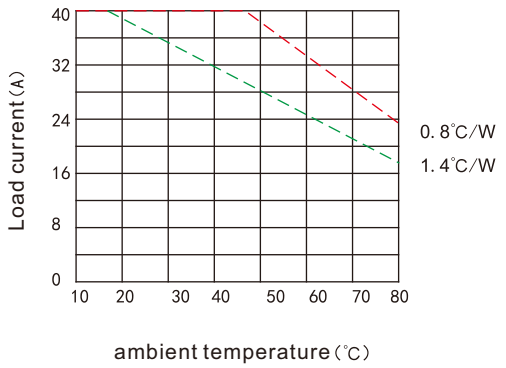

60A

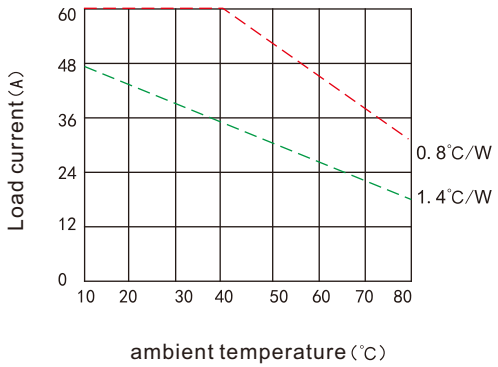

80A

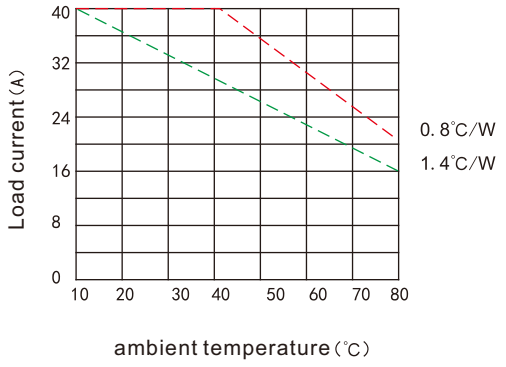

100A

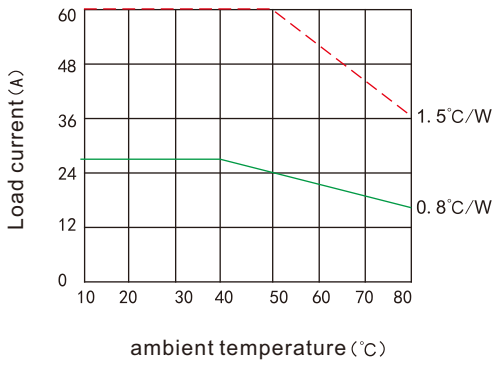

120A

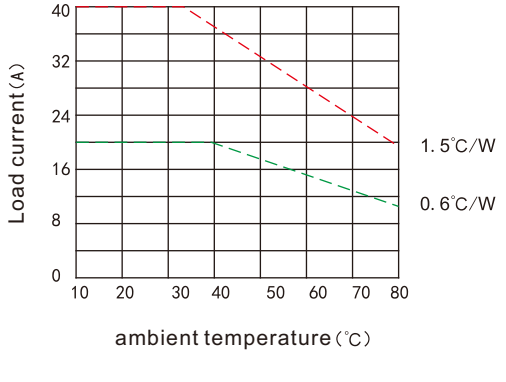

Precautions:

(A) All parameters are valid at 25°C unless otherwise specified.
(B) Loads of 10A-25A require a heatsink; loads above 40A require fan cooling or water cooling.
(C) Loads above 80°C require fan cooling or water cooling.
(D) When using inductive loads, be sure to connect a varistor in parallel at the output terminal, with a value of 1.6-1.9 times the load voltage.

For more information, please refer to the datasheet.

Operation Notice

(A) Resistive loads must not exceed 60% of the rated current.

(B) Inductive or capacitive loads must not exceed 40% of the rated current.

(C) Motor loads must not exceed 20% of the rated current.

(D) Solid-state relays must be equipped with heat sinks suitable for their operating requirements. When the load heat dissipation conditions are poor, the allowance should be appropriately increased. Short circuits must be avoided.

(E) Overcurrent protection measures: Overcurrent and load short circuits are the main causes of permanent damage to the internal output thyristor of SSRs. Fast-acting fuses and air switches are one method of overcurrent protection. For small capacity relays, fuses can also be used.

(F) Overvoltage protection measures: Overvoltage protection can be achieved by parallel connection of varistor (MOV). The size of the MOV area determines the power absorbed, and the thickness of the MOV determines the protection voltage value. Generally, 471/10D varistors can be selected for 220V series SSRs, 681/10D varistors for 380V series SSRs, and 821/10D varistors for 480V series SSRs.

Related certifications

RoHS

CE

BALSEAL

BSS single-phase AC fuse-type solid-state relay with fuse

Model listing

Valid product listings

BSS	10	44	D	032	F
Series code	Rated load current	Rated load voltage	Input signal type	input voltage	Trigger mode

Rated load current
10: 10A
15: 15A
20: 20A
25: 25A
30: 30A
40: 40A
60: 60A
80: 80A
100: 100A
120: 120A

Rated load voltage
24:24—440VAC
44:40—440VAC

Input signal type
D:DC
A:AC

input voltage
032: 3-32VDC
250: 70-250VAC

Trigger mode
F:fuse type



The main application

Output parameters	10A	15A	20A	25A	30A	40A
Rated load voltage	24:24~280VAC 44:40~480VAC	24:24~280VAC 44:40~480VAC	24:24~280VAC 44:40~480VAC	24:24~280VAC 44:40~480VAC	24:24~280VAC 44:40~480VAC	24:24~280VAC 44:40~480VAC
Rated load current	10A	15A	20A	25A	30A	40A
Transient peak withstand voltage	24:600VAC 44:900VAC	24:600VAC 44:900VAC	24:600VAC 44:900VAC	24:600VAC 44:900VAC	24:600VAC 44:900VAC	24:600VAC 44:900VAC
Off-state leakage current	AC ≤10mA	AC ≤10mA	AC ≤10mA	AC ≤10mA	AC ≤10mA	AC ≤10mA
On-state pressure drop	AC ≤1.5V	AC ≤1.5V	AC ≤1.5V	AC ≤1.5V	AC ≤1.5V	AC ≤1.5V
On-off time	AC ≤10mA	AC ≤10mA	AC ≤10mA	AC ≤10mA	AC ≤10mA	AC ≤10mA
Input voltage range	DC 3-32VDC	DC 3-32VDC	DC 3-32VDC	DC 3-32VDC	DC 3-32VDC	DC 3-32VDC
Control current	DC 4-25mA	DC 4-25mA	DC 4-25mA	DC 4-25mA	DC 4-25mA	DC 4-25mA
Power-off time	≤10ms	≤10ms	≤10ms	≤10ms	≤10ms	≤10ms

Input parameters

Input voltage range	DC 3~32VDC	AC 90~250VAC
Reverse voltage	DC 32VDC	/
Input current range	DC 6~25mA	AC 5~30mA
Ensure the voltage is on.	DC 3VDC	AC 90VAC
Ensure shutdown voltage	DC 1.5VDC	AC 10VAC

Other parameters

Medium pressure resistance	⩾2500VAC
Insulation resistance	500MΩ 500VDC
Safety regulations for casing materials	UL94-V0
Substrate material	aluminum
working temperature	-30℃~80℃
storage temperature	-30℃~125℃
Maximum working humidity	85% No condensation
Installation method	No condensation
weight	90~105g

Line diagram BSS AC fuse-type output Series

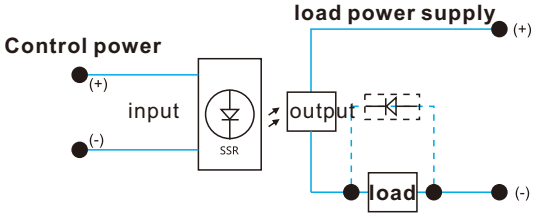

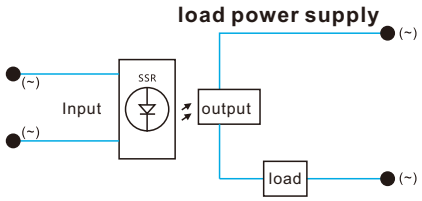

Appearance size BSS AC fuse-type output Series

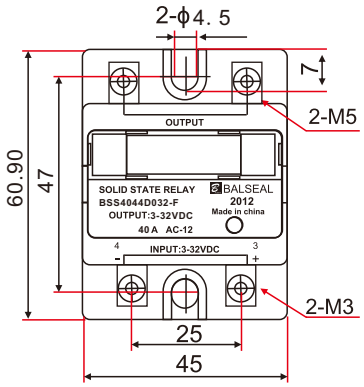

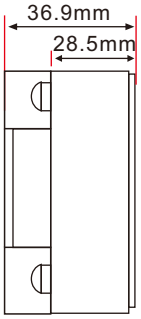

Important Notes:

(A) All parameters are for 25°C unless otherwise specified.
(B) A heatsink must be installed for loads above 10A.
(C) Fan cooling or water cooling is required for temperatures above 80°C.

For more information, please contact your reseller.

BALSEAL

BSA Single-phase AC Solid State Relay

- Two independent SSRs are integrated in a standard panel package.
- Rated load current 10-80A
- Bolt installation makes maintenance easier.
- LED input status indicator



Model listing

Valid product listings

BSA	S	10	44	D	032	XXX
Series code	form of control	Rated load current	Rated load voltage	Input signal type	input voltage	Trigger mode

form of control
- S:Dual-channel dual-control type
- D: Dual-channel single-control type

Rated load current
- 10: 10A
- 15: 15A
- 25: 25A
- 30: 30A
- 40: 40A
- 60: 60A
- 80: 80A

Rated load voltage
- 44: 24-440VAC

Input signal type
- D:DC

input voltage
- 32:3-32VDC

Input parameters	10A	15A	25A	30A	40A	60A	80A
Input voltage range	DC 3~32VDC	DC 3~32VDC	DC 3~32VDC	DC 3~32VDC	DC 3~32VDC	DC 3~32VDC	DC 3~32VDC
Reverse voltage	DC 32VDC	DC 32VDC	DC 32VDC	DC 32VDC	DC 32VDC	DC 32VDC	DC 32VDC
Ensure the voltage is on.	3VDC	3VDC	3VDC	3VDC	3VDC	3VDC	3VDC
Ensure shutdown voltage	3VDC	3VDC	3VDC	3VDC	3VDC	3VDC	3VDC
Input current range	DC 3~25mA	DC 3~25mA	DC 3~25mA	DC 3~25mA	DC 3~25mA	DC 3~25mA	DC 3~25mA
On-off time	≤10mS	≤10mS	≤10mS	≤10mS	≤10mS	≤10mS	≤10mS

Output parameters	10A	15A	25A	30A	40A	60A	80A
Rated load voltage	24~440VAC	24~440VAC	24~440VAC	24~440VAC	24~440VAC	24~440VAC	24~440VAC
Rated load current	10A	15A	25A	30A	40A	60A	80A
Transient peak withstand voltage	44:900VAC	44:900VAC	44:900VAC	44:900VAC	44:900VAC	44:900VAC	44:900VAC
Off-state leakage current	AC ≤2mA	AC ≤2mA	AC ≤2mA	AC ≤2mA	AC ≤2mA	AC ≤2mA	AC ≤2mA
On-state pressure drop	AC ≤1.5V	AC ≤1.5V	AC ≤1.5V	AC ≤1.5V	AC ≤1.5V	AC ≤1.5V	AC ≤1.5V
On-off time	≤10mS	≤10mS	≤10mS	≤10mS	≤10mS	≤10mS	≤10mS

Other parameters	
Medium pressure resistance	≥2500VAC
Insulation resistance	1000MΩ
Safety regulations for casing materials	UL94-V0
Substrate material	aluminum
working temperature	-20℃~75℃
storage temperature	-30℃~125℃
Maximum working humidity	85% No condensation
Installation method	Industrial DIN Install
Certification	CE、RoHS

Important Notes:

(A) All parameters are for 25°C unless otherwise specified.
(B) A heatsink must be installed for loads above 10A.
(C)Fan cooling or water cooling is required for temperatures above 80°C.

For more information, please refer to the datasheet.

BSA S/BSAD output Series

单位:mm

BSAS/Dual-channel dual-control type

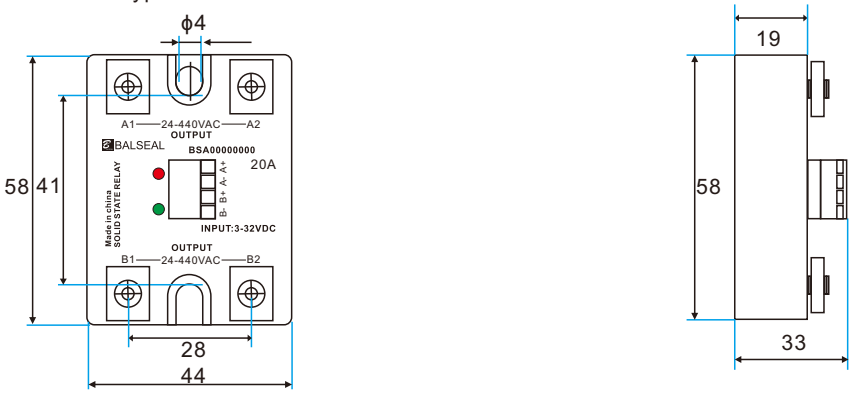

BSA S/BSAD output Series

单位:mm

BSAD/Dual-channel single-control type

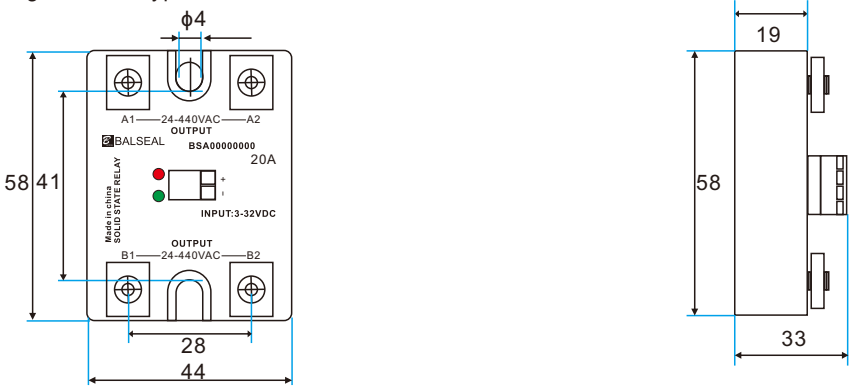

BSA S/BSAD **output Series**

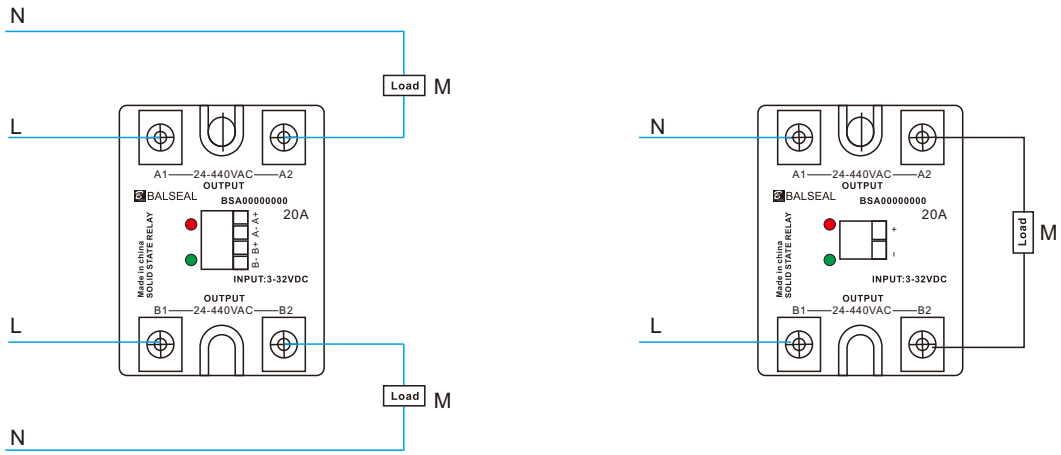

BALSEAL

BSZ Solid State Relay Heatsink

comparison table

- Valid product listings
- Invalid product correspondence

BSZ Solid State Relay Heatsink

model	BSA	BSC	BSD	Appearance size	Installation method	passing current (A)	weight (g)	appendix
BSZ-HH060	●	●		50×80×50		≤20A	100	
BSZ-HH061	●	●		70×125×50		≤40A	200	
BSZ-HH062	●	●		110×125×50		≤60A	300	
BSZ-HH063	●	●	●	180×125×50		≤80A	630	
BSZ-HH064	●	●		100×70×80		≤110A	-	
BSZ-HH034	●	●	●	105×100×80		≤30A	500	
BSZ-HH035	●	●	●	150×88×35		≤20A	365	
BSZ-HH036	●	●	●	150×100×80		≤40A	700	
BSZ-HH037	●	●	●	260×180×50		≤80A	1400	
BSZ-HH038	●	●	●	150×125×135		≤150A	2100	
BSZ-HH039	●	●	●	200×125×135		≤250A	2800	
BSZ-HH040	●	●	●	300×125×135		≤350A	4200	

Model correspondence chart

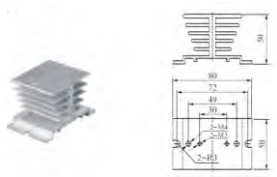

BSZ-HH060

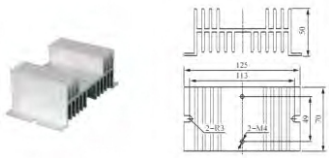

BSZ-HH061

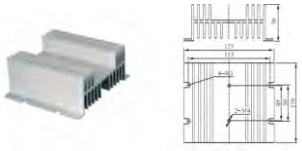

BSZ-HH062

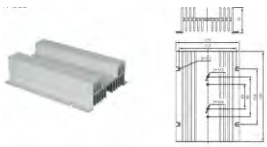

BSZ-HH063

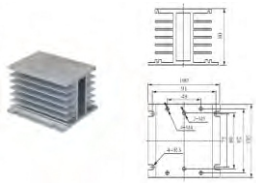

BSZ-HH034

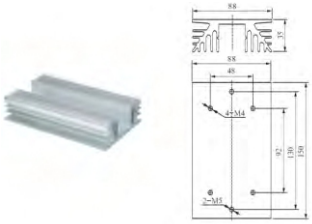

BSZ-HH035

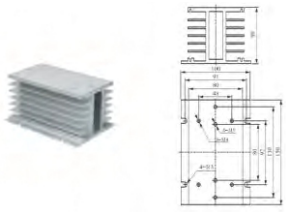

BSZ-HH036

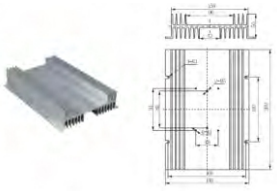

BSZ-HH037

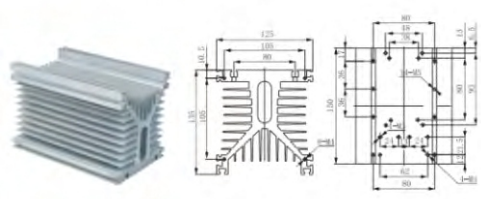

BSZ-HH038

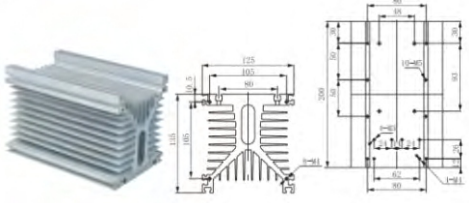

BSZ-HH039

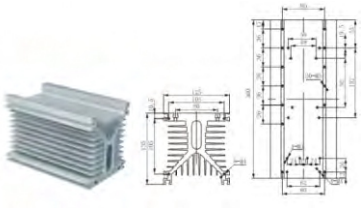

BSZ-HH040

BALSEAL

BSL Series PCB Mount Solid State Relays

PCB mounting type



- AC output uses bidirectional thyristor output, zero-voltage turn-on, zero-current turn-off.
- DC output uses bipolar transistor output, with low on-state voltage, fast switching speed, and strong anti-interference capability.
- Input signals are compatible with TTO and CMOS digital logic circuits.
- Input-output isolation withstand voltage of 2500V.
- Optical isolation between input and output circuits.
- Single-row through-hole board soldering mounting, standard size.

RoHS CE

Model listing

Valid product listings

BSL	10	220	D	03	XXX
Series code	Rated load current 05: 5A 10: 10A	Rated load voltage 220: 220VAC 380: 380VAC	Input signal type D:DC	input voltage 10: 3-14VDC 30:3-32VDC	other

Input parameters

Input voltage range	DC 3~32VDC	DC 3~14VDC
Maximum input current	6-35mA	6-35mA
Ensure the voltage is on.	3.5VDC	3.5VDC
Ensure shutdown voltage	1.5VDC	1.5VDC

Output parameters

Rated load voltage	AC 220V / AC 380V
Rated load current	5A/10A
Transient peak withstand voltage	800VAC
Off-state leakage current	≤1.5mA
On-state pressure drop	≤1.5V
On-off time	≤10ms

Other parameters

Medium pressure resistance	≥2500VAC
Insulation voltage	4000V
Safety regulations for casing materials	UL94-V0
Substrate material	aluminum
working temperature	-20℃~70℃
storage temperature	-30℃~125℃
Maximum working humidity	85% No condensation
Installation method	PCB welding type
sizeL-W-H(mm)	43*12*27
Certification	CE

Precautions:

(A) When soldering relays, the soldering time should not exceed 10 seconds at 260°C and 5 seconds at 350°C.
(B) When wiring the relay, ensure the input polarity is correct to avoid damaging the relay.
(C) The heat sink is built-in. The heat generated by the relay's own power consumption needs to be dissipated through the casing. If the heat dissipation around the relay is poor, the output load current should be derated.
(D) If the transient voltage across the relay exceeds the nominal value, a varistor should be connected in parallel with the relay's output to prevent the relay from breaking down.

For more information, please contact your distributor.

BSL Installation dimensions

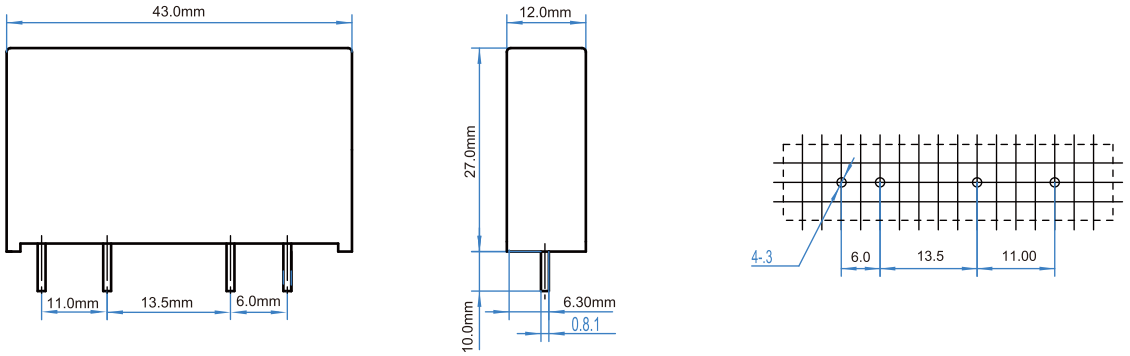

BSL circuit diagram

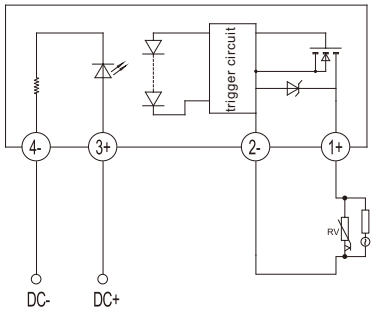

BSL **temperature curve**

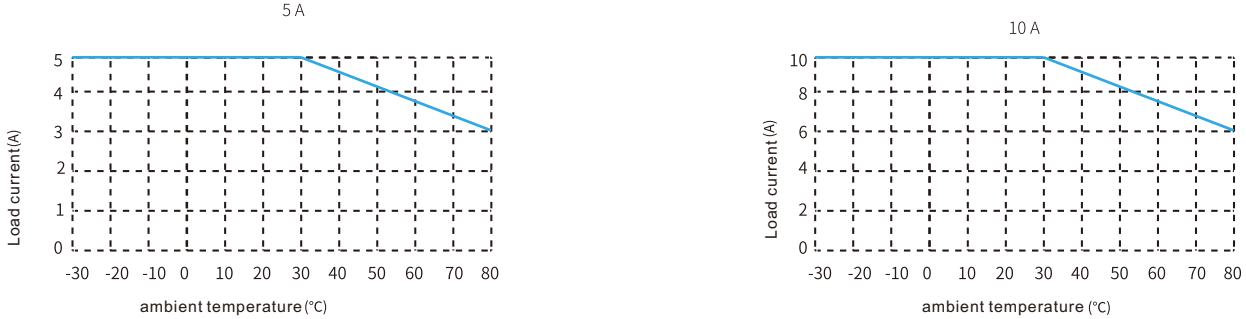

BALSEAL

BST Solid State Relay

BST Series ultra-thin SSR

- Ultra-thin design, only 6mm wide
- Extra-long service life
- Higher switching frequency
- Compliant with CE and RoHS directives
- Compatible with standard socket installation



- With a wide range of input voltage and load current, it is suitable for various electric heating controls and is widely used in plastic machinery, textile machinery, rubber machinery, and food and beverage machinery. The switching action is noiseless, and the contactless design provides excellent vibration resistance, making it widely applicable in medical settings and lighting control.

The main application

Heating systems

Injection molding machines; Furnaces; Power supply and distribution systems; Air conditioning; Textile machinery; Household heaters; Infrared heating; Thermoforming dryers; etc.



Lighting

Public lighting

Cinema lighting

Theater lighting

Airport runway lighting

Street lighting

etc...

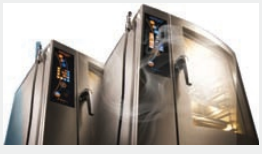

Control

PLC interface

Heating element control

Solenoid valve

Contactor coil

Sensor optocoupler

etc...



Other applications

Transformer starting,

Power factor correction,

Uninterruptible power supplies, Power switches,

Capacitor control,

etc.



Model listing

Valid product listings

BST	H	1	S	DA	032	440	TE

Series code

Appearance options
standard：Vertical
H：Horizontal

Number of contacts
1: NO

Control type
S：solid state relay

Control method
DA：DC-AC
DD：DC-DC

Input voltage
032: 5-32VDC
220: 12-220VDC

load voltage
100: 5-100VDC
440: 40-440VDC

Wiring method
TE：Screw type set
TS：Pull-back set

Input parameters	BST1D32A440	BST1D220A440	BST1D32D100	BST1D220D100
Input voltage range	5-32VDC	12-220VDC	5-32VDC	12-220VDC
Input current range	5-20mA	5-20mA	5-100VDC\4A	40-440VAC\2A

Output parameters				
Rated load voltage	40-440VAC	40-440VAC	5-100VDC	5-100VDC
Rated load current	AC:2A	AC:2A	DC:4A	DC:4A
Transient peak withstand voltage	AC≤1.6V	AC≤1.6V	DC≤1.2V	DC≤1.2V
Off-state leakage current	AC≤10mA	AC≤10mA	DC≤5mA	DC≤5mA
On-state pressure drop	≥1500VAC	≥1500VAC	≥1500VAC	≥1500VAC
On-off time	AC≤10mA	AC≤10mA	DC≤5mA	DC≤5mA

Other parameters	
Installation type	Single in-line type
Adapter socket	SRT1E\SRT1S
Insulation resistance	1000MΩ (500VDC)
ambient temperature	-30℃ - 80℃
storage temperature	-30℃ - 80℃
Maximum working humidity	-30℃ - 80℃
Certification	CE、RoHS

Wiring And Wiring

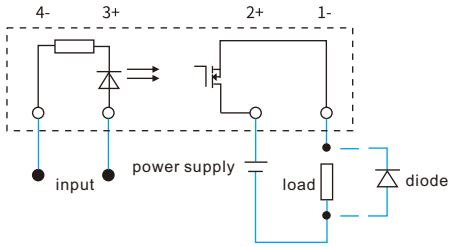

Relay size

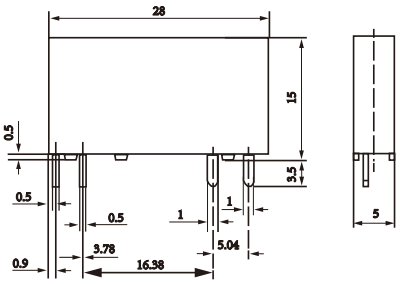

Relay installation size

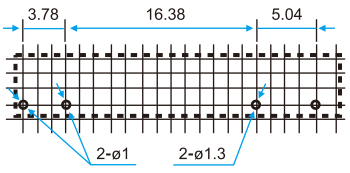

BALSEAL

BST Solid State Relay Accessories

Socket shape and installation size

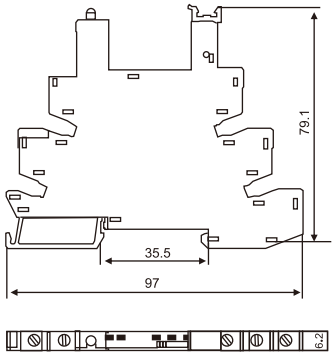

TE：Screw type set

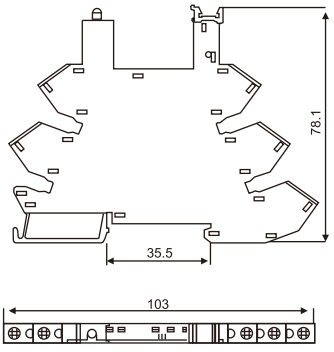

TS：Pull-back set

Circuit diagram

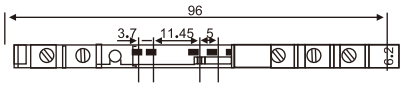

Circuit diagram

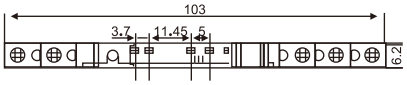

Terminal configuration internal wiring diagram

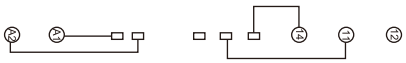

Terminal configuration internal wiring diagram



Annex



LST01 connector



LST02 Marking strip

BALSEAL

BST Solid State Relay

BSTH Series Mini SSR

- Miniature design, suitable for high-density PCB mounting or socket mounting requirements.
- Optical isolation, introducing high voltage resistance
- Pin compatibility with standard packaged electromagnetic relays
- Interface circuits used between PLC and external loads



- The BSTH type Mini solid-state relay is small in size and suitable for PLC control applications requiring high-density PCB mounting or socket mounting.

The main application

Heating systems

Injection molding machines; Furnaces; Power supply and distribution systems; Air conditioning; Textile machinery; Household heaters; Infrared heating; Thermoforming dryers; etc.



Lighting

Public lighting

Cinema lighting

Theater lighting

Airport runway lighting

Street lighting

etc...

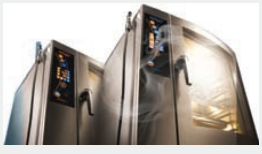

Control

PLC interface

Heating element control

Solenoid valve

Contactor coil

Sensor optocoupler

etc...



Other applications

Transformer starting,

Power factor correction,

Uninterruptible power supplies, Power switches,

Capacitor control,

etc.



Model listing

Valid product listings

BST	H	1	S	DA	032	440	TE

Series code

Appearance options
standard：Vertical
H：Horizontal

Number of contacts
1: NO

Control type
S：solid state relay

Control method
DA：DC-AC
DD：DC-DC

Input voltage
032: 5-32VDC
220: 12-220VDC

load voltage
100: 5-100VDC
440: 40-440VDC

Wiring method
TE：Screw type set
TS：Pull-back set

Input parameters	BSTH1D32A440	BSTH1D220A440	BSTH1D32D100	BSTH1D220D100
Input voltage range	5-32VDC	12-220VDC	5-32VDC	12-220VDC
Input current range	5-35mA	5-35mA	5-100VDC	5-100VDC

Output parameters				
Rated load voltage	40-440VAC	40-440VAC	5-100VDC	5-100VDC
Rated load current	AC:5A	AC:5A	DC:5A	DC:5A
Transient peak withstand voltage	AC≤1.6V	AC≤1.6V	DC≤1.2V	DC≤1.2V
Off-state leakage current	AC≤10mA	AC≤10mA	DC≤5mA	DC≤5mA
On-state pressure drop	≥1500VAC	≥1500VAC	≥1500VAC	≥1500VAC
On-off time	AC≤10mA	AC≤10mA	DC≤5mA	DC≤5mA

Other parameters	
Installation type	Single in-line type
Adapter socket	SRT1E\SRT1S
Insulation resistance	1000MΩ（500VDC）
ambient temperature	-30℃ - 80℃
storage temperature	-30℃ - 80℃
Maximum working humidity	-30℃ - 80℃
Certification	CE、RoHS

Wiring And Wiring

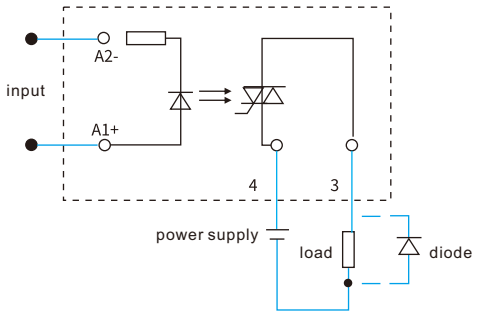

Relay size

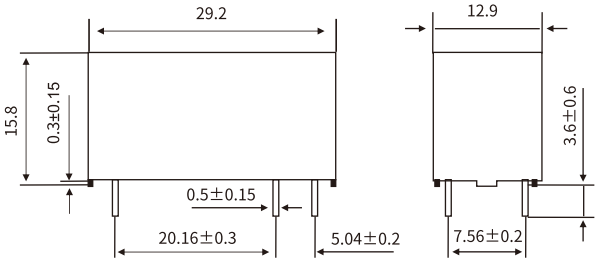

Relay installation size

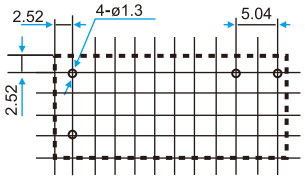

BALSEAL

BST Solid State Relay Accessories

Socket shape and installation size



SRW-*-E

Circuit diagram

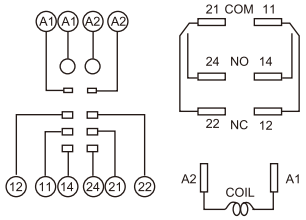

Wirlng Diagram/

SRW2E Series

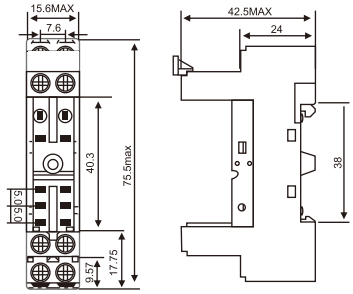

Series/SRW-2-E

Annex





model	Applicable socket	Minimum quantity
LSW-V-1 (H:20.6)	SRW1E SRW2E	10 units, each paired with one socket.
LSW-V-2 (:15.6)	SRW1S SRW2S	
	SRW1T SRW2T	

model	Applicable socket	Minimum quantity
LSW-L-1	SRW1E SRW2E	20 pieces
	SRW1S SRW2S	

NOTES

BALSEAL

Create more for you



www.balseal-electric.com

BALSEAL® China Operations Center

www. balseale-electric. com

BALSEAL®

TEL:+86 020 6681 9799

Email:cn-electric@balseal-electric. com

BALSEAL® **European Operations Center**

6 PROSPECT WAY ROYAL OAK INDUST
RIAL ESTATE DAVENTRY NORTHAMPT
ONSHIRE UNITED KINGDOM NN11 8PL

www. balseale-electric. com

uk-electric@balseal-electric. com

The product information described in this sample is subject to change without notice.

BALSEAL® Reserved for final interpretation