BALSEAL

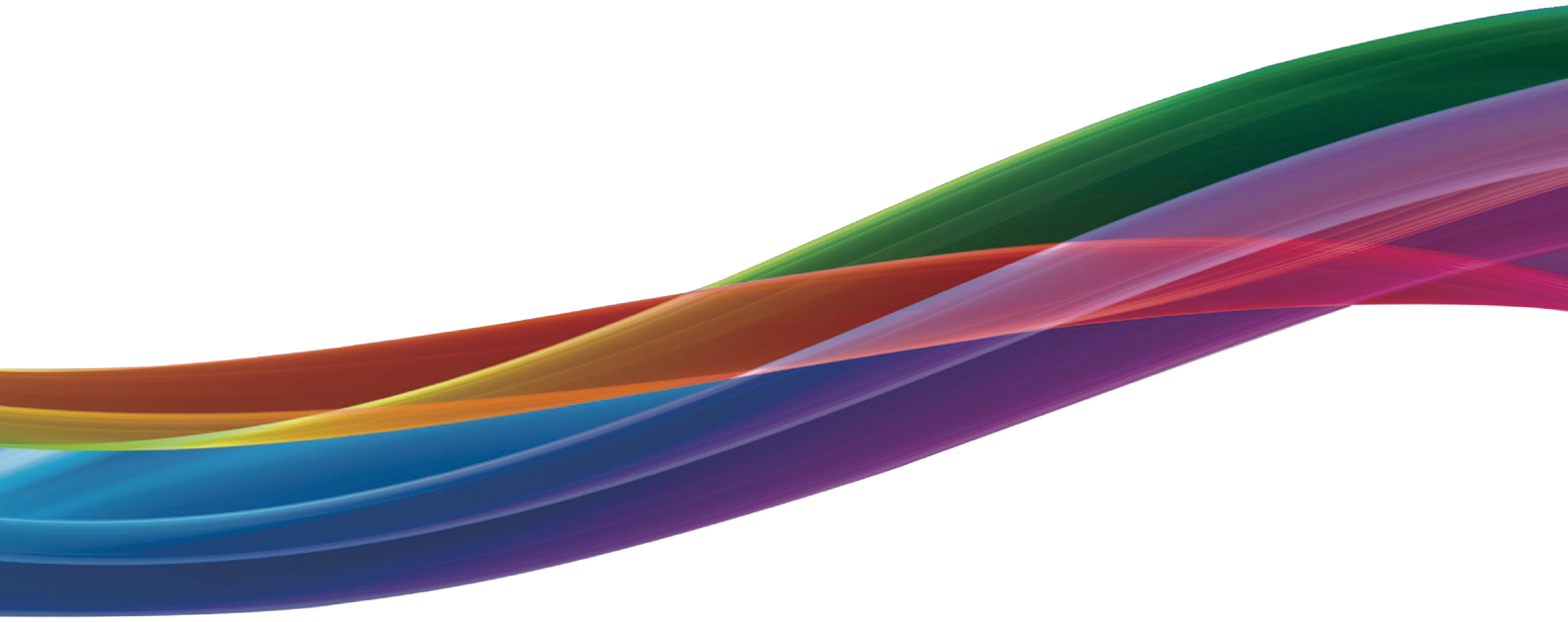

BFVD200 Standard-type Low-voltage Inverter

Rev.6.2,2026-08-24

BALSEAL

BFVD200 Standard-type Low-voltage VFD

V/F Control| Open-loop Vector Control Supported

Closed-loop Vector Control Supported | Multiple Operation Modes

- High starting torque with superior shock-load handling capacity.
- User-friendly PID control for process variable control including tension and fixed-quantity applications.
- Supports PG card for closed-loop control, suitable for high-precision machining control.
- Built-in PLC function to effectively reduce overall application costs.
- Instantaneous power-failure ride-through function improves production efficiency and prevents equipment damage caused by unexpected shutdown.
- PCB conformal coating, high-performance fan and well-sealed housing design enhance product tolerance in harsh environments.



Aluminum-processing equipment

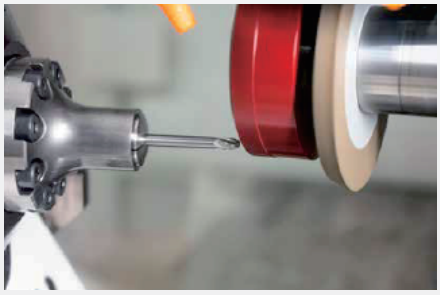

Machine tools



Pumping equipment



BFVD200 Standard-type Low-voltage VFD

FEATURES Multi-functional High-performance Vector VFD

- Space-saving compact design with DIN-rail mounting (≤2.2kW).
- Adopts international-standard PCB conformal coating, high-performance fan and high-sealing housing design to enhance product tolerance in harsh environments.
- Rs485 communication interface provided.
- V/F, Open-loop Vector and Closed-loop Vector control modes.
- Power Range: 220V: 0.4~2.2 kW, 380V: 0.4~1200 kW
- Frequency Range: 0-600 Hz



Technical Specifications

Related Specifications

Maximum Frequency	0~600Hz
Carrier Frequency	Carrier frequency: 0.5-16 kHz, auto-adjustable according to load characteristics.
Input Frequency Resolution	Digital Setting: 0.01 Hz
	Analog Setting: Max. Frequency × 0.025%
Control Modes	V/F Control
	Open-loop Vector Control (Pg-less)
	Closed-loop Vector Control (Pg-equipped)
Starting Torque	G-model: 0.5 Hz / 150% (PG-less)
	P-model: 0.5 Hz / 100%
Speed Adjustment Range	1:100 (PG-less)
Speed Stability Accuracy	+0.5% (PG-less)
Torque Control Accuracy	+5% (FVC)
Overload Capacity	G-model: 150% rated current for 60 s; 180% rated current for 3 s
	P-model: 120% rated current for 60 s; 150% rated current for 3 s
Torque Boost	Auto Torque Boost; Manual Torque Boost: 0.1% ~ 30.0 %
V/F Curve	Three modes: Linear, Multi-point, N-power V/F Curve (1.2-power, 1.4-power, 1.6-power, 1.8-power, 2-power)
Separate V/F Control	2 modes: Full-separate, Semi-separate
Acceleration / Deceleration Curve	Linear or S-curve acceleration/deceleration mode. Four sets of acceleration/deceleration time, time range: 0.0 s ~ 6500.0 s
DC Braking	DC Braking Frequency: 0.00 Hz ~ Max. Frequency
	Braking Time: 0.0 s ~ 100.0 s
	Braking Action Current Value: 0.0% ~ 100.0 %
Simple PLC, Multi-speed Operation	Max. 16-speed operation via built-in PLC or control terminals
Built-in PID	Easily realize process control closed-loop system
Automatic Voltage Regulation (AVR)	Automatically maintain constant output voltage when grid voltage varies
Over-voltage & Over-current Stall Control	Automatic current & voltage limitation during operation, prevent frequent over-current/over-voltage tripping
Fast Current Limiting Function	Minimize over-current faults to protect normal operation of inverter
Torque Limit & Control	"Excavator" characteristic, automatic torque limitation during operation to prevent frequent over-current tripping

Custom Functions

Excellent Performance	Realize asynchronous motor control by high-performance current vector control technology
Momentary Power Loss Ride-Through	Compensate voltage drop via load feedback energy during momentary power failure, keep inverter running for short time
Fast Current Limiting	Avoid frequent over-current faults of inverter
Timing Control	Timing Control Function: Setting range: 0.0Min ~ 6500.0Min
Supported Communication Modes	RS-485
Command Source	Operation panel setting, control terminal setting, serial communication port setting. Multiple switching modes are available.

Operation

Frequency Source	Frequency Source: 10 switchable frequency-source modes: Digital setting, analog voltage setting, analog current setting, pulse setting,
	serial port setting. Multiple
Auxiliary Frequency Source	10 auxiliary frequency sources. Flexible realization of auxiliary frequency fine-tuning and frequency synthesis.
Input Terminals	5 digital input terminals, 1 of which supports high-speed pulse input up to 100 kHz;
	1 analog input terminal supports 0~10V voltage input or 4~20mA current input

Technical Specifications

Related Parameters

Operation

Output Terminals	1 open-collector output terminal
	1 relay output terminal
	1 analog output terminal, supporting 0~20 mA current output or 0~10 V voltage output

Keyboard operation display

LED display	Display parameters
Key lock and function selection	Realize partial or full key locking, and define the scope of function for partial keys to prevent mis-operation.
Protection functions	Power-on motor short-circuit detection, input and output phase-loss protection, overcurrent protection, overvoltage protection, undervoltage protection, overheating protection, overload protection, etc.

Operating environment

Application site	Indoor location, avoid direct sunlight; free from dust, corrosive gas, flammable gas, oil mist, water vapor, water dripping, salt and other contaminants.
Altitude	Below 1000 m (derating is required when altitude exceeds 1000 m)
Ambient temperature	-10°C ~ +40°C (derating is required when ambient temperature ranges from 40°C to 50°C)
Humidity	Less than 95%RH, no water condensation
Vibration	Less than 5.9 m/s^2 (0.6 g)
Storage temperature	-20°C~ +60°C

Structure

Cooling mode	Forced air cooling
Protection degree	IP 20

Extension type

Expansion card

External model of expansion card	Function description	Applicable models
PG-T11-01	5V ABZ Differential Input PG CardManualsLib	BFVD200-0.4-1200
PG-T11-02	24V ABZ OC & Push-pull Input PG Card	
ET-T11-01	1 normally-open/normally-closed relay, 2 digital inputs, 1 FIV, 1 FOC	
ET-T11-02	1 high-speed pulse output, 2 DIL, 1 FIV, 1 FOC	
CM-T11-01	Profibus-DP Communication Card	
CM-T11-02	EtherCAT Communication Card	
CM-T11-03	CAN Communication Card	
CM-T11-04	Modbus TCP Communication Card	
CM-T11-05	Profinet Communication Card	

Note: This model is equipped with only one multi-function expansion card interface. The communication card and PG card share this interface; only one of them can be selected for expansion, and they cannot work simultaneously.

Model designation

■ Valid product models

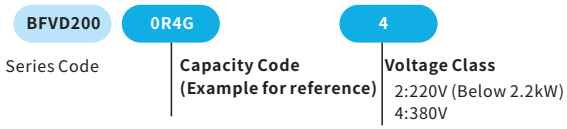

Capacity Code	Heavy-duty (kW)	Light-duty (kW)
0R4G	0.4	-
-	-	-
450G	450	500

Corresponding Model

Model Input Voltage:1PH AC220V±15%	Voltage Class	Input Current (A)	Output Current (A)	Heavy-duty Adaptable Motor Power(kW)	Light-duty Adaptable Motor Power(kW)
BFVD200-0R4G-2	1PH AC220V	5.4	2.1	0.4	--
BFVD200-0R75G-2	1PH AC220V	7.2	3.8	0.75	--
BFVD200-1R5G-2	1PH AC220V	10.0	7.2	1.5	--
BFVD200-2R2G-2	1PH AC220V	16	9	2.2	--
BFVD200-3R7G-2	1PH AC220V	23	13	3.7	--

Model Input Voltage:3PH AC380V±15%	Voltage Class	Input Current (A)	Output Current (A)	Heavy-duty Adaptable Motor Power(kW)	Light-duty Adaptable Motor Power(kW)
BFVD200-0R4G-4	3PH AC380V	3.4	1.5	0.4	--
BFVD200-0R75G-4	3PH AC380V	3.8	2.1	0.75	--
BFVD200-1R5G-4	3PH AC380V	5	3.8	1.5	--
BFVD200-2R2G-4	3PH AC380V	5.8	5.1	2.2	--
BFVD200-3R7G-4	3PH AC380V	10/15	9/13	3.7	5.5
BFVD200-5R5G-4	3PH AC380V	15/20	13/17	5.5	7.5
BFVD200-7R5G-4	3PH AC380V	17.5	17.5	7.5	11
BFVD200-11G-4	3PH AC380V	26/35	25/32	11	15
BFVD200-15G-4	3PH AC380V	35/38	32/37	15	18.5
BFVD200-18G-4	3PH AC380V	38/46	37/45	18.5	22
BFVD200-22G-4	3PH AC380V	46/62	45/60	22	30
BFVD200-30G-4	3PH AC380V	62/76	60/75	30	37
BFVD200-37G-4	3PH AC380V	76/90	75/90	37	45
BFVD200-45G-4	3PH AC380V	92/113	90/110	45	55
BFVD200-55G-4	3PH AC380V	113/180	152/176	55	75
BFVD200-75G-4	3PH AC380V	157/180	152/176	75	90
BFVD200-90G-4	3PH AC380V	180/214	176/210	90	110
BFVD200-110G-4	3PH AC380V	214/256	210/253	110	132
BFVD200-132G-4	3PH AC380V	256/307	253/304	132	160
BFVD200-160G-4	3PH AC380V	307/355	304/340	160	185
BFVD200-185G-4	3PH AC380V	355/385	340/380	185	200
BFVD200-200G-4	3PH AC380V	385/430	380/426	200	220
BFVD200-220G-4	3PH AC380V	430/648	426/465	220	250
BFVD200-250G-4	3PH AC380V	468/525	465/520	250	280
BFVD200-280G-4	3PH AC380V	525/610	520/585	280	315
BFVD200-315G-4	3PH AC380V	610/665	585/650	315	350
BFVD200-350G-4	3PH AC380V	665/700	650/696	350	400
BFVD200-400G-4	3PH AC380V	700/800	696/790	400	450
BFVD200-450G-4	3PH AC380V	800/865	790/880	450	500
BFVD200-500G-4	3PH AC380V	835/960	880/950	500	560
BFVD200-560G-4	3PH AC380V	960/1112	950/1100	560	630
BFVD200-630G-4	3PH AC380V	1112/1290	1100/1280	630	710
BFVD200-710G-4	3PH AC380V	1290/1472	1280/1380	710	800
BFVD200-800G-4	3PH AC380V	1472/1680	1380/1640	800	900
BFVD200-900G-4	3PH AC380V	1680/1800	1640/1720	900	1000
BFVD200-1000G-4	3PH AC380V	1800	1720	1000	--
BFVD200-1200G-4	3PH AC380V	2180	2100	1200	--

Note: Suffix [-D] after model numbers 0.4 kW, 0.75 kW, 1.5 kW, 2.2 kW denotes DIN-rail mounting type.
For further information, please contact your distributor.

Overall Dimensions

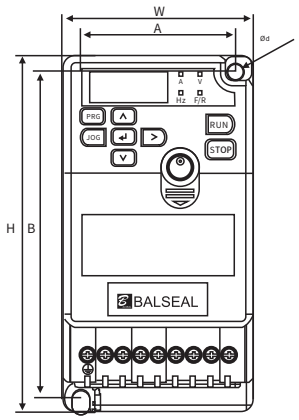

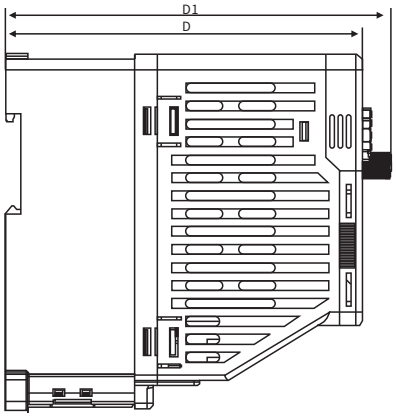

No:1

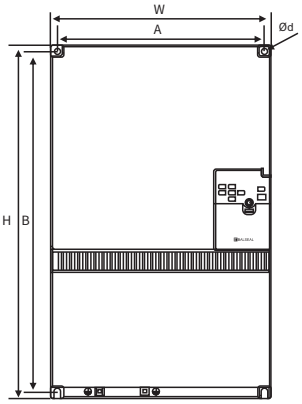

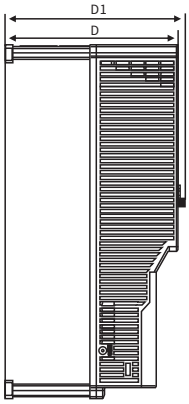

No:2

Overall Dimensions

Overall Dimensions

Mounting Dimensions

Unit:mm

Model Input Voltage:1PH AC220V±15%	W	H	D	D1	A	B	Ød	No
BFVD200-0R4G-2	69	129	129	139.5	56	118	5.5	No:1
BFVD200-0R75G-2	69	129	129	139.5	56	118	5.5	No:1
BFVD200-1R5G-2	69	129	129	139.5	56	118	5.5	No:1
BFVD200-2R2G-2	109	129	133	142	96	118	5.5	No:1
Model Input Voltage:3PH AC380V±15%	W	H	D	D1	A	B	Ød	
BFVD200-0R4G-4	109	129	133	142	96	118	5.5	No:1
BFVD200-0R75G-4	109	129	133	142	96	118	5.5	No:1
BFVD200-1R5G-4	109	129	133	142	96	118	5.5	No:1
BFVD200-2R2G-4	109	129	133	142	96	118	5.5	No:1
BFVD200-3R7G-4	109	129	133	142	96	118	5.5	No:1
BFVD200-5R5G-4	125	185	165	174	113	175	5.5	No:1
BFVD200-7R5G-4	125	185	165	174	113	175	5.5	No:1
BFVD200-11G-4	138	260	165	174	126	250	5.5	No:2
BFVD200-15G-4	138	260	165	174	126	250	5.5	No:2
BFVD200-18G-4	168	282	165	174	152	268	7	No:2
BFVD200-22G-4	168	282	165	174	152	268	7	No:2
BFVD200-30G-4	205	364	197	206	189	350	7	No:2
BFVD200-37G-4	205	364	197	206	189	350	7	No:2
BFVD200-45G-4	262	420	205.5	214.5	246	405	7	No:2

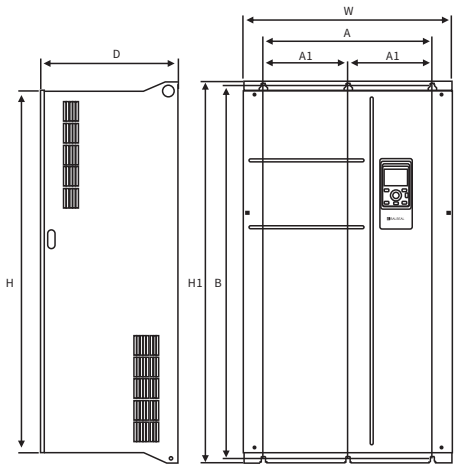

No:3

Overall Dimensions

Overall Dimensions　　Mounting Dimensions　　Unit:mm

Model Input Voltage:3PH AC380V±15%	W	H	H1	D	A	A1	B	Ød	No
BFVD200-75G-4	275	590	630	310	200	--	612	9	No:3
BFVD200-90G-4	275	590	630	310	200	--	612	9	No:3
BFVD200-110G-4	275	590	630	310	200	--	612	9	No:3
BFVD200-132G-4	400	675	715	310	320	–	695	11	No:3
BFVD200-160G-4	400	675	715	310	320	–	695	11	No:3
BFVD200-185G-4	400	790	830	320	320	160	810	11	No:3
BFVD200-200G-4	400	790	830	320	320	160	810	11	No:3
BFVD200-220G-4	400	790	830	320	320	160	810	11	No:3
BFVD200-250G-4	530	920	970	350	430	215	950	11	No:3
BFVD200-280G-4	530	920	970	350	430	215	950	11	No:3
BFVD200-315G-4	530	920	970	350	430	215	950	11	No:3
BFVD200-350G-4	550	1120	1180	400	460	230	1150	13	No:3
BFVD200-400G-4	550	1120	1180	400	460	230	1150	13	No:3
BFVD200-450G-4	550	1120	1180	400	460	230	1150	13	No:3

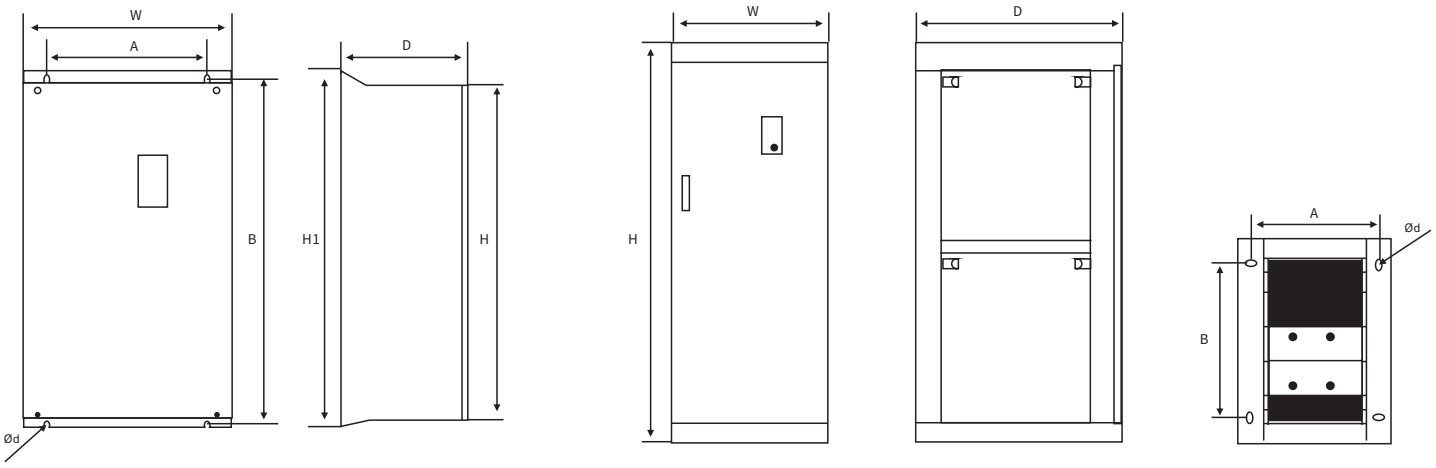

No:4

Model Input Voltage:3PH AC380V±15%	W	H	H1	D	A	B	Ød	No
BFVD200-500G-4	550	Wall-mount type:1120	Wall-mount type: 1180	400	230+230	1150	13	No:4
	550	Cabinet-mount type:1540	Cabinet-mount type:1600	400	295	260	14	No:4
BFVD200-560G-4	760	Wall-mount type:1330	Wall-mount type: 1400	450	325+325	1370	13	No:4
	760	Cabinet-mount type:1780	Cabinet-mount type:1850	450	700	310	14	No:4
BFVD200-630G-4	760	Wall-mount type:1330	Wall-mount type: 1400	450	325+325	1370	13	No:4
	760	Cabinet-mount type:1780	Cabinet-mount type:1850	450	700	310	14	No:4
BFVD200-710G-4	700	2200	--	1000	650	900	13	No:4
BFVD200-800G-4	700	2200	--	1000	650	900	13	No:4
BFVD200-900G-4	700	2200	--	1000	650	900	13	No:4
BFVD200-1000G-4	700	2200	--	1000	650	900	13	No:4
BFVD200-1200G-4	700	2200	--	1000	650	900	13	No:4

For further information, please contact your distributor.

Basic Wiring Diagram

- Input Voltage:3PH AC380V±15%
  0.4-55KW

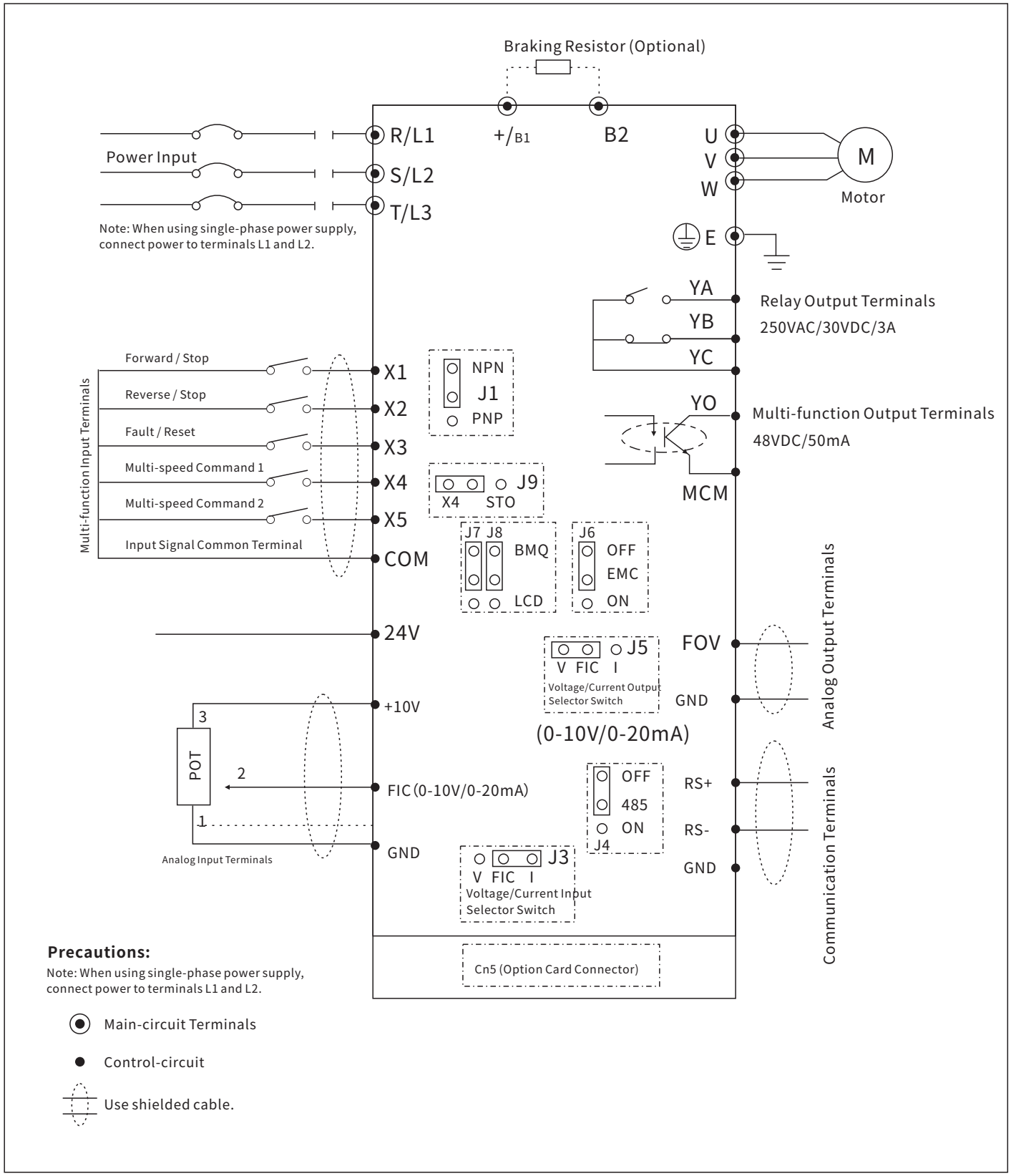

Precautions:

Note: When using single-phase power supply, connect power to terminals L1 and L2.

Main-circuit Terminals

Control-circuit

Use shielded cable.

Basic Wiring Diagram

- Input Voltage:3PH AC380V±15%
  ≥75KW

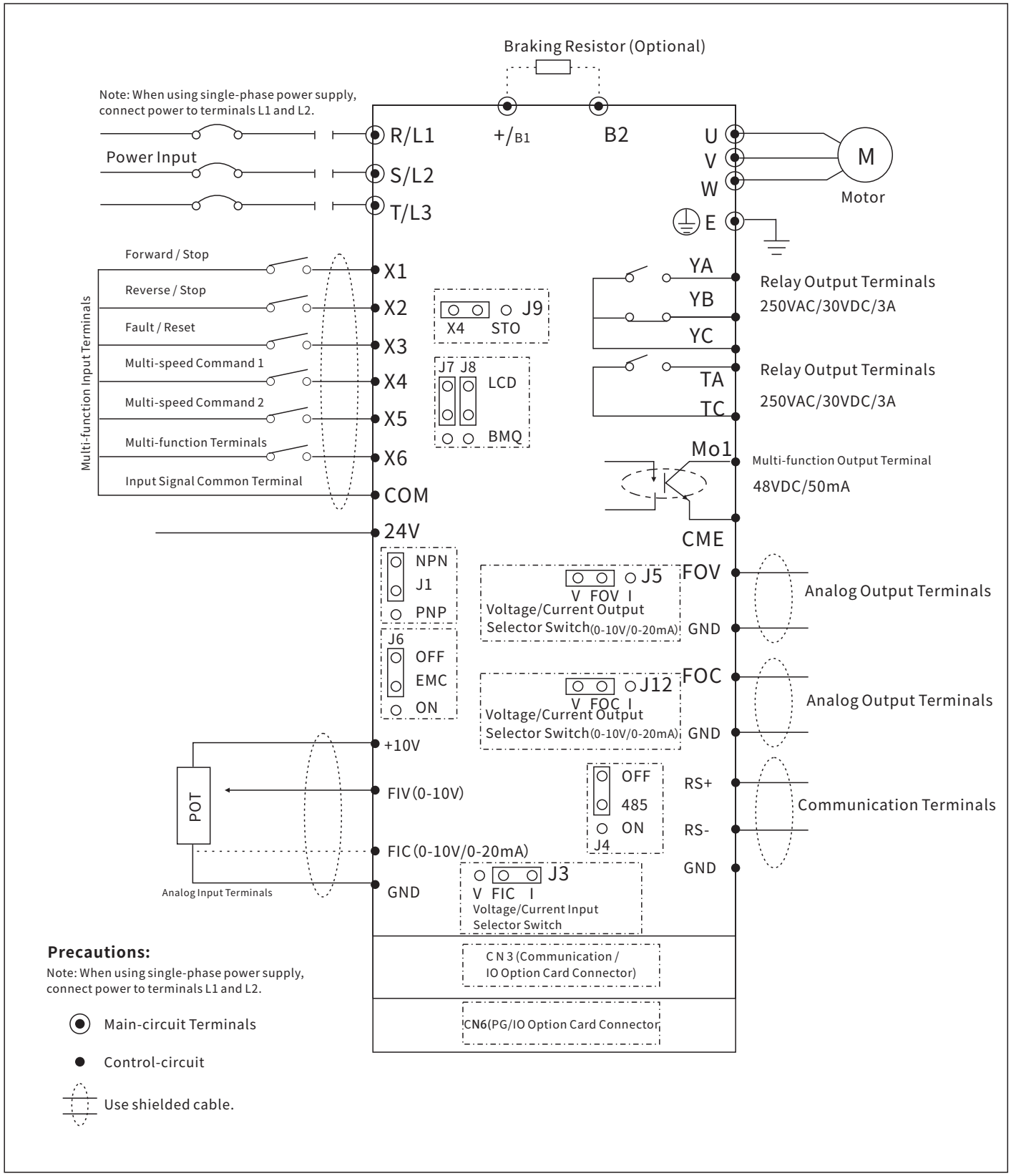

Precautions:

Note: When using single-phase power supply, connect power to terminals L1 and L2.

Main-circuit Terminals

Control-circuit

Use shielded cable.

Terminal Description

Main-Circuit Terminal Description

Name	Function Description
L1/L2/L3	Power Input Terminals
U/V/W	Inverter Output Terminals, for connecting 3-phase asynchronous motor
+/B1 , B2	Braking Resistor
⏚ E	Ground Terminal

Control-Circuit Terminal Description

Name	Function Description	
X1	Forward / Stop Command Input (Multi-function Input Terminal)	Multi-function input terminals X1~X6 can be specifically set via parameters P4.00~P4.05. The configured terminal becomes active when short-circuited with COM. Refer to the manual for detailed parameters.
X2	Reverse / Stop Command Input (Multi-function Input Terminal)	
X3	Fault / Reset Multi-function Input Terminal	
X4	Multi-function Input Terminal	
X5	Multi-speed Command 2 (High-speed Pulse Input)	
X6	Multi-function Input Terminal	
COM	Digital Input Common Terminal	
FOV	Analog Output Terminal	0-10V/0-20mA
FOC	Analog Output Terminal	0-10V/0-20mA
10V	Power Supply for Frequency Setting	
FIC	Analog Input Terminal	0-20mA/ 0-10V
FIV	Analog Input Terminal	0-10V
24V	24V Auxiliary Power Supply	
RGEN	Rs485 Communication Ground	
CME	Y0 Opto-coupler Output Common Terminal	
GND/COM	Input Signal Common Terminal	
YO	Multi-function Opto-coupler Output Contact	48VDC-50mA
YA-TA	Relay Output Contact (Normally-Open)	
YB	Relay Output Contact (Normally-Closed)	
YC	Relay Output Contact Common Terminal for YA, YB, TA	
TC	Relay Output Contact Common Terminal TA	
RS+/RS-	RS-485	
Mo1	Multi-function Opto-coupler Output Contact (Compatible with High-speed Pulse Output)	

Agreements for Ordering and Usage

Thank you for your consistent support and trust in our company' s products.
When you place orders for products specified in our product selection brochures, specifications and other documents (collectively referred to as "product brochures and related documents" hereinafter), the terms and conditions set forth in the following agreements shall apply. Please confirm and accept the contents below before placing your order.

Notes on Contents of Product Brochures and Related Documents
(1) The rated values, performance values and specification values of our products stated in this selection brochure are obtained under respective independent-test conditions. Such values are not guaranteed under combined conditions. In addition, durability varies with operating environment and conditions.

(2) Reference data and reference values stated in product brochures and related documents are for reference only, and do not guarantee normal operation within such ranges.

(3) Specifications, appearance and accessories of our products stated in product brochures and related documents may be modified or products may be discontinued without prior notice due to product improvement or other reasons.

(4) Contents stated in product brochures and related documents are subject to change without prior notice.

Notes on Application
(1) When combining our products with third-party products, please verify applicable laws, regulations and standards.
Furthermore, customers shall independently verify compatibility between our products and their own systems, equipment and devices according to actual operating conditions. Our company assumes no liability for such compatibility.

(2) Usage and application examples stated in product brochures and related documents are for reference only. Please confirm performance and safety of machinery and devices before adopting our products. Such examples do not constitute any license for customers to use our products. Our company makes no warranty regarding customers' intellectual property rights or non-infringement of third-party intellectual property rights.

(3) Please pay full attention to the following points when using our products.
① Use our products with sufficient margin against rated and performance values;
② Adopt safety designs such as redundancy and malfunction-prevention design to avoid secondary hazards and damages in case of product failure;
③ Implement proper power distribution and installation for our products applied in customers' systems, equipment and devices, so as to ensure products deliver specified performance and functions.

(4) Continued use under degraded product conditions may cause abnormal heating, smoking or fire due to deteriorated insulation performance. Please perform regular maintenance on our products as well as systems, equipment and devices incorporating our products.

(5) Our products are general-purpose items developed and manufactured for general-industrial applications. They are not intended for the applications listed below. Unless otherwise agreed in writing between the customer and our company, our company provides no warranty if the products are used for such applications.
① Applications requiring high-safety performance, such as nuclear-energy control equipment, transportation equipment (railway, aviation, marine vessels, automobiles, passenger-carrying machinery, etc.), aerospace equipment, lifting equipment, medical devices, safety devices, and other equipment or machinery that may endanger human life or physical safety;
② Applications requiring high reliability, such as gas, water and power supply systems, 24-hour continuous-operation systems, and settlement systems;
③ Operation and management beyond the specifications, conditions or environmental ranges stated in product brochures and related documents (e.g. outdoor equipment, operation under chemical contamination or electromagnetic interference).
If customers intend to use our products for the above-mentioned applications, be sure to consult our sales representatives.

3. Inspection
Promptly inspect our products upon receipt. In addition, pay close attention to product handling and protection before and during inspection.

4. Warranty Terms
(1) Warranty Period
The warranty period for our products is 1 year from the date of purchase or delivery to the designated location. This provision shall not apply if other notes are specified in product brochures and related documents, or if a separate agreement is concluded between the customer and our company.

(2) Warranty Coverage
Within the above-mentioned warranty period, if a failure attributable to our company occurs, free-of-charge replacement or repair service shall be provided at the place of purchase, receiving location or our service outlets.
However, failures arising from the following causes are excluded from warranty coverage:
① Storage or operation of the product beyond the conditions and environmental ranges specified in product brochures and related documents;
② Causes originating from factors other than our products;
③ Modification or repair performed by parties other than our company;
④ Software not supplied by our company;
⑤ Usage inconsistent with the intended applications of our products;
⑥ Incorrect replacement of maintenance parts or installation of accessories not performed in accordance with contents stated in the operation manual, product brochures and related documents;
⑦ Failure causes unforeseeable under the scientific and technical standards at the time of product shipment by our company;
⑧ Causes not attributable to our company (including force-majeure events such as natural disasters and catastrophes).

Furthermore, the warranty herein applies only to each individual product. Damages incurred as a result of product failure are excluded from warranty coverage.

5. Disclaimer
The warranty specified in these agreements constitutes the complete warranty for our products.
Our company shall not be liable for special damages, indirect damages, consequential damages or incidental damages arising from our products.

6. Scope of Services
Product prices do not cover expenses such as technician on-site dispatch. Additional charges will apply for the following requirements:
(1) Installation-adjustment guidance and witness inspection during trial-run (including development of application-specific software, operation tests, etc.);
(2) Maintenance inspection, adjustment and repair work;
(3) Technical guidance and technical training;
(4) Product testing or inspection specified by customers.

The above terms are based on sales and usage within mainland China. For sales or usage in countries and regions outside mainland China, please consult our sales representatives. In addition, our company provides no warranty within mainland China for products intended exclusively for sale outside mainland China.

Thank you for your consistent support and trust in our company's products.

“A Tribute to Every Engineer"

The world moves forward not only by brilliant innovations,but also by countless dedicated practitioners,who keep every piece of equipment running reliably.

-BALSEAL-

BALSEAL

Create more for you



BALSEAL® CHINA

www. balseal-electric. com

BALSEAL® **Contact Information for China**

+86 020-6681-9799

EMAIL:cn-electric@balseal-electric. com

BALSEAL®

6 PROSPECT WAY ROYAL OAK INDUSTRIAL ESTATE DAVENTRY NORTHAMPTONSHIRE UNITED KINGDOM NN11 8PL

www. balseal-electric. com

uk-electric@balseal-electric. com

Product information contained in this brochure is subject to the actual product and is subject to change without prior notice.
BALSEAL reserves the right of final interpretation.