BALSEAL

BST Solid State Relay

BSTH Series Mini SSR

- Miniature design, suitable for high-density PCB mounting or socket mounting requirements.
- Optical isolation, introducing high voltage resistance
- Pin compatibility with standard packaged electromagnetic relays
- Interface circuits used between PLC and external loads



- The BSTH type Mini solid-state relay is small in size and suitable for PLC control applications requiring high-density PCB mounting or socket mounting.

The main application

Heating systems

Injection molding machines; Furnaces; Power supply and distribution systems; Air conditioning; Textile machinery; Household heaters; Infrared heating; Thermoforming dryers; etc.



Lighting

Public lighting

Cinema lighting

Theater lighting

Airport runway lighting

Street lighting

etc...

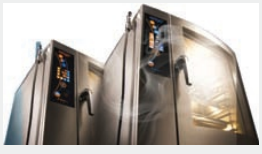

Control

PLC interface

Heating element control

Solenoid valve

Contactor coil

Sensor optocoupler

etc...



Other applications

Transformer starting,

Power factor correction,

Uninterruptible power supplies, Power switches,

Capacitor control,

etc.



Model listing

Valid product listings

BST	H	1	S	DA	032	440	TE

Series code

Appearance options
standard：Vertical
H：Horizontal

Number of contacts
1: NO

Control type
S：solid state relay

Control method
DA：DC-AC
DD：DC-DC

Input voltage
032: 5-32VDC
220: 12-220VDC

load voltage
100: 5-100VDC
440: 40-440VDC

Wiring method
TE：Screw type set
TS：Pull-back set

Input parameters	BSTH1D32A440	BSTH1D220A440	BSTH1D32D100	BSTH1D220D100
Input voltage range	5-32VDC	12-220VDC	5-32VDC	12-220VDC
Input current range	5-35mA	5-35mA	5-100VDC	5-100VDC

Output parameters				
Rated load voltage	40-440VAC	40-440VAC	5-100VDC	5-100VDC
Rated load current	AC:5A	AC:5A	DC:5A	DC:5A
Transient peak withstand voltage	AC≤1.6V	AC≤1.6V	DC≤1.2V	DC≤1.2V
Off-state leakage current	AC≤10mA	AC≤10mA	DC≤5mA	DC≤5mA
On-state pressure drop	≥1500VAC	≥1500VAC	≥1500VAC	≥1500VAC
On-off time	AC≤10mA	AC≤10mA	DC≤5mA	DC≤5mA

Other parameters	
Installation type	Single in-line type
Adapter socket	SRT1E\SRT1S
Insulation resistance	1000MΩ（500VDC）
ambient temperature	-30℃ - 80℃
storage temperature	-30℃ - 80℃
Maximum working humidity	-30℃ - 80℃
Certification	CE、RoHS

Wiring And Wiring

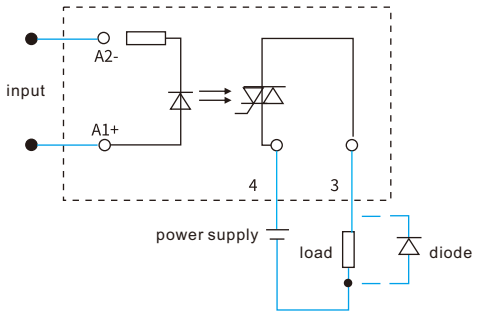

Relay size

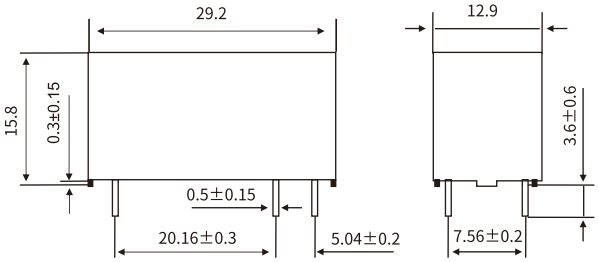

Relay installation size

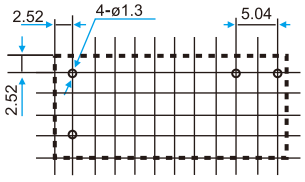

BALSEAL

BST Solid State Relay Accessories

Socket shape and installation size



SRW-*-E

Circuit diagram

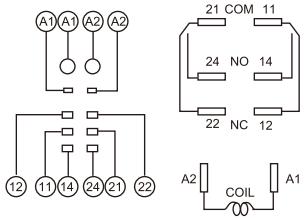

Wirlng Diagram/

SRW2E Series

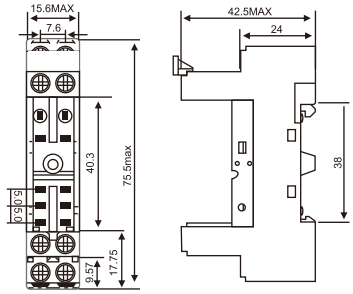

Series/SRW-2-E

Annex





model	Applicable socket	Minimum quantity
LSW-V-1 (H:20.6)	SRW1E SRW2E	10 units, each paired with one socket.
LSW-V-2 (:15.6)	SRW1S SRW2S	
	SRW1T SRW2T	

model	Applicable socket	Minimum quantity
LSW-L-1	SRW1E SRW2E	20 pieces
	SRW1S SRW2S	