BALSEAL

BST Solid State Relay

BST Series ultra-thin SSR

- Ultra-thin design, only 6mm wide
- Extra-long service life
- Higher switching frequency
- Compliant with CE and RoHS directives
- Compatible with standard socket installation



- With a wide range of input voltage and load current, it is suitable for various electric heating controls and is widely used in plastic machinery, textile machinery, rubber machinery, and food and beverage machinery. The switching action is noiseless, and the contactless design provides excellent vibration resistance, making it widely applicable in medical settings and lighting control.

The main application

Heating systems

Injection molding machines; Furnaces; Power supply and distribution systems; Air conditioning; Textile machinery; Household heaters; Infrared heating; Thermoforming dryers; etc.



Lighting

Public lighting

Cinema lighting

Theater lighting

Airport runway lighting

Street lighting

etc...

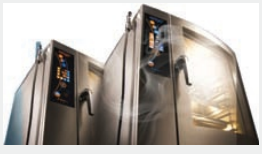

Control

PLC interface

Heating element control

Solenoid valve

Contactor coil

Sensor optocoupler

etc...



Other applications

Transformer starting,

Power factor correction,

Uninterruptible power supplies, Power switches,

Capacitor control,

etc.



Model listing

Valid product listings

BST	H	1	S	DA	032	440	TE

Series code

Appearance options
standard：Vertical
H：Horizontal

Number of contacts
1: NO

Control type
S：solid state relay

Control method
DA：DC-AC
DD：DC-DC

Input voltage
032: 5-32VDC
220: 12-220VDC

load voltage
100: 5-100VDC
440: 40-440VDC

Wiring method
TE：Screw type set
TS：Pull-back set

Input parameters	BST1D32A440	BST1D220A440	BST1D32D100	BST1D220D100
Input voltage range	5-32VDC	12-220VDC	5-32VDC	12-220VDC
Input current range	5-20mA	5-20mA	5-100VDC\4A	40-440VAC\2A

Output parameters				
Rated load voltage	40-440VAC	40-440VAC	5-100VDC	5-100VDC
Rated load current	AC:2A	AC:2A	DC:4A	DC:4A
Transient peak withstand voltage	AC≤1.6V	AC≤1.6V	DC≤1.2V	DC≤1.2V
Off-state leakage current	AC≤10mA	AC≤10mA	DC≤5mA	DC≤5mA
On-state pressure drop	≥1500VAC	≥1500VAC	≥1500VAC	≥1500VAC
On-off time	AC≤10mA	AC≤10mA	DC≤5mA	DC≤5mA

Other parameters	
Installation type	Single in-line type
Adapter socket	SRT1E\SRT1S
Insulation resistance	1000MΩ (500VDC)
ambient temperature	-30℃ - 80℃
storage temperature	-30℃ - 80℃
Maximum working humidity	-30℃ - 80℃
Certification	CE、RoHS

Wiring And Wiring

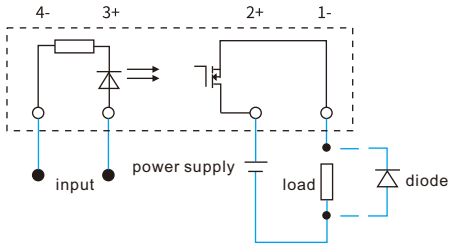

Relay size

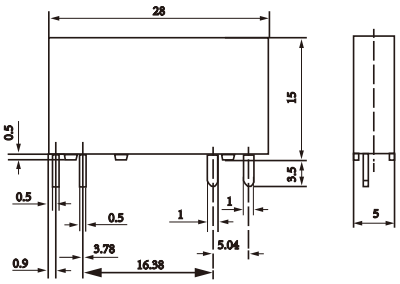

Relay installation size

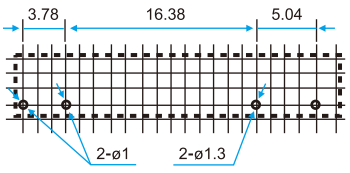

BALSEAL

BST Solid State Relay Accessories

Socket shape and installation size

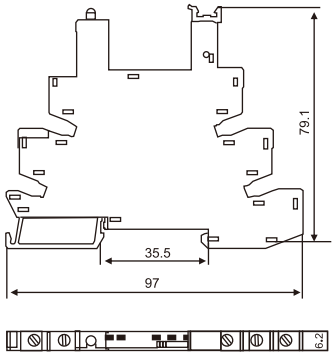

TE：Screw type set

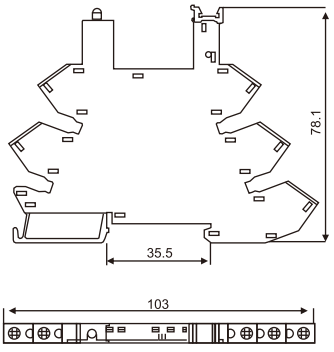

TS：Pull-back set

Circuit diagram

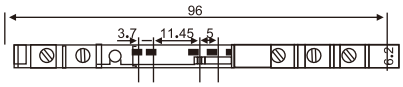

Circuit diagram

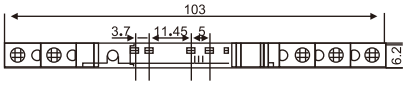

Terminal configuration internal wiring diagram

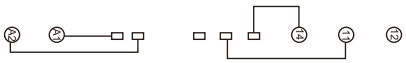

Terminal configuration internal wiring diagram



Annex



LST01 connector



LST02 Marking strip