BSC DC output Series



Single Phase DC Solid State Relays

SSR 10 - 40Amp

- Rated load current 10A to 40A
- Flip-type bolt protection makes maintenance easier.
- LED input status indicator
- AC/DC control optional
- Certifications: CE, RoHS

Industry applications:

It is widely used in automation fields such as lighting control, heating control, office appliances, and fire protection systems. It is suitable for extreme and harsh environments such as chemical, coal mining, and ceramic industries that require explosion-proof, dust-proof, and corrosion-proof features.

Output parameters	10A	15A	20A	25A	30A	40A
Rated load voltage	12:12~250VDC	12:12~250VDC	12:12~250VDC	12:12~250VDC	12:12~250VDC	12:12~250VDC
Rated load current	10A	15A	20A	25A	30A	40A
Transient peak withstand voltage	12:400VDC	12:400VDC	12:400VDC	12:400VDC	12:400VDC	12:400VDC
Off-state leakage current	DC ≤5mA	DC ≤5mA	DC ≤5mA	DC ≤5mA	DC ≤5mA	DC ≤5mA
On-state pressure drop	DC ≤1.2VDC	DC ≤1.2VDC	DC ≤1.2VDC	DC ≤1.2VDC	DC ≤1.2VDC	DC ≤1.2VDC
On-off time	≤5ms	≤5ms	≤5ms	≤5ms	≤5ms	≤5ms

Input parameters	10A	15A	20A	25A	30A	40A
Input voltage range	DC 3~32VDC	DC 3~32VDC	DC 3~32VDC	DC 3~32VDC	DC 3~32VDC	DC 3~32VDC
Reverse voltage	DC 32VDC	DC 32VDC	DC 32VDC	DC 32VDC	DC 32VDC	DC 32VDC
Input current range	DC 6~25mA	DC 6~25mA	DC 6~25mA	DC 6~25mA	DC 6~25mA	DC 6~25mA
Ensure the voltage is on.	DC 3VDC	DC 3VDC	DC 3VDC	DC 3VDC	DC 3VDC	DC 3VDC
Ensure shutdown voltage	DC 3VDC	DC 3VDC	DC 3VDC	DC 3VDC	DC 3VDC	DC 3VDC
Starting current	≤7mA	≤7mA	≤7mA	≤7mA	≤7mA	≤7mA

Other parameters	
Medium pressure resistance	≥2500VAC
Insulation resistance	500MΩ 500VDC
Safety regulations for casing materials	UL94-V0
Substrate material	aluminum
working temperature	-30℃~80℃
storage temperature	-30℃~125℃
Maximum working humidity	85% No condensation
Installation method	No condensation
weight	90~105g

Important Notes:

(A) All parameters are for 25°C unless otherwise specified.
(B) A heatsink must be installed for loads above 10A.
(C) Fan cooling or water cooling is required for temperatures above 80°C.

For more information, please contact your reseller.

Model listing

Valid product listings

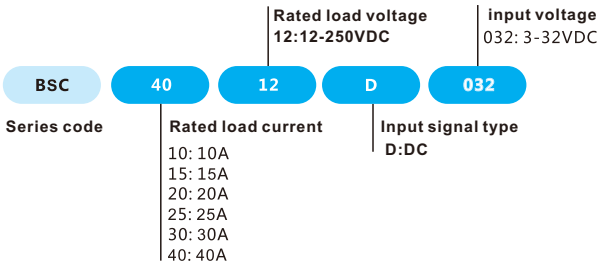

Wiring diagram

BSC DC output Series

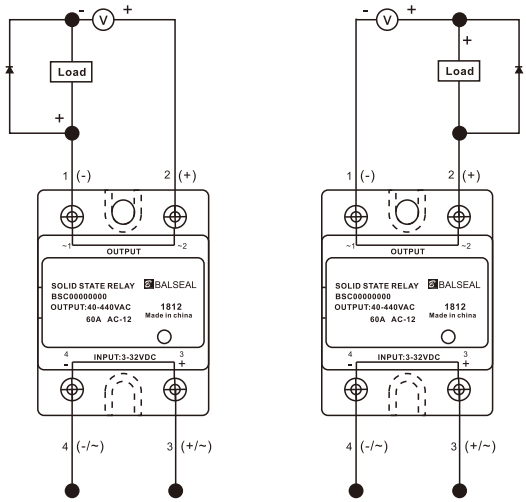

Mechanical dimensions

BSC output Series

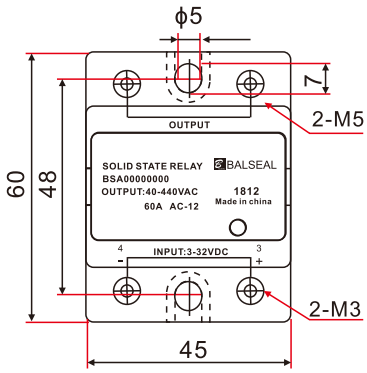

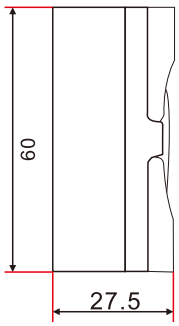

Wiring diagram

BSC output Series

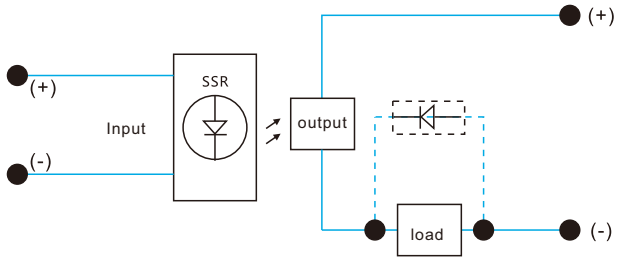

DC controlled DC