BALSEAL® Electric

BPS Series of compact high-efficiency switching power supplies

Power range：15-150W

Compact high-efficiency switching power supply

Features

-Full-range AC input 96-264VAC/100-240VAC
-Small, ultra-thin, compact design
-Operating temperature up to 70℃
-Short circuit/overload/overvoltage protection
-CE and RoHS compliant
-High efficiency, long lifespan, and high reliability
-Low power consumption under no-load design

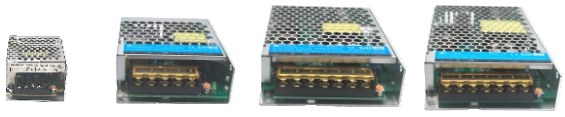

• Machine tools • Semiconductor manufacturing equipment • Injection molding machines • Food and packaging equipment • Automated parking systems
• Automotive equipment • Logistics handling equipment • Agricultural equipment • Energy-related equipment, etc.

Technical Data

project \ model	【15W】BPS*-015 12□/24□/48□VDC	【35W】 BPS*-035 12□/24□/48□VDC	【50W】 BPS*-050 12□/24□/48□VDC	【100W】BPS*-100 12□/24□/48□VDC	【150W】BPS*-150 12□/24□/48□VDC
input parameters					
Control voltage range	85-264VAC 120-373VAC				
frequency range	47-63Hz				
efficiency(TYP)					
5V	80%	82%	83%	83%	-
12V	82%	86%	86%	86%	87.5%
24V	88%	88%	88%	88%	89%
48V	85%	89%	90%	90%	90%
AC current	0.43A/115VAC 0.23A/230VAC	0.7A/115VAC 0.42A/230VAC	0.95A/115VAC 0.56A/230VAC	0.95A/115VAC 0.56A/230VAC	3A/115VAC 1.7A/230VAC
surge current	冷启动45A/230VAC	–	–	–	冷启动60A/230VAC
Leakage current	<0.75mA/240VAC	–	–	–	
Output parameters					
DC voltage	Rated current (A)	Rated current (A)	Rated current (A)	Rated current (A)	Rated current (A)
5V	3	7	10	18	–
12V	1.2	3	4.2	8.5	12.5
24V	0.63	1.5	2.1	4.5	6.5
48V	0.32	0.8	1.05	2.3	3.3
Ripple and noise					
5V	80mVp-p	80mVp-p	80mVp-	100mVp-p	-
12V	80mVp-p	80mVp-p	120mVp-p	120mVp-p	100mVp-p
24V	150mVp-p	150mVp-p	150mVp-p	150mVp-p	200mVp-p
48V	200mVp-p	200mVp-p	200mVp-p	200mVp-p	400mVp-p
Voltage adjustment range					
5V	4.5~5.5V				
12V	10.2~13.8V				
24V	21.6~28.8V				
48V	43.2~52.8V				
Voltage accuracy	±2.0%				
Linear adjustment rate	±0.5%				
load regulation	±0.5%				
Start-up and rise time	1000ms,30m/230VAC				
hold time(Typ)	30ms/230VAC				
Protect					
overload	The output is disconnected when it exceeds 110-150% (intermittent, automatic reset) of the rated output power, and resets upon reconnection.				
Overvoltage	Protection mode: Turn off output voltage, restart to resume.				
action display	LED (green)				

Withstand voltage		**Vibration resistance and impact resistance**
Input and output terminals	3,000V AC per minute	Frequency 10-55 Hz 2G fixed value, X/Y/Z directions, 2 hours each
Between input and ground terminals	2,000V AC per minute	Impact resistance: 200 m/s², 11 m/s, 6 directions, 1 time each
Between output and ground terminals	500VAC per minute	

Insulation resistance	Megohmmeter of 100MΩ or higher, 500V DC (at 25°C and 70%RH) (between input and output terminals, and between input and ground terminals).			
Use ambient temperature		**Use ambient humidity**	**Storage temperature and humidity**	**temperature coefficient**
-25～+70°C(No icing, with output rating decreasing characteristic)		20～90% RH (No condensation)	-40~+85℃ 10~95% RH. No condensation	±0.03%/℃ (0~50℃)

Safety Design and Standards

conform to EN55032(CLSPR32)Class 8,EN55014,EN61000-3-2,-3 GB/T 9254,BSMI CNS13438,EAC TP TC020 EN61000-4-2,3,4,5,6,8,11,EN61000-6-2(EN50082-2),EAC TP TC 020

BALSEAL® Electric

BPS Series of compact high-efficiency switching power supplies

Power range：15-150W

Model and naming

■ Select according touapplication requirements.

■ Product model code

BPS	24	—	035	*
Series code	Output voltage: V/DC 05:5VDC 12:12VDC 24:24VDC 48:48VDC		Power (W) 015:15W 035:35W 050:50W 075:75W 100:100W 150:150W	special request

block diagram

Oscillation frequency: 115VAC :75KHz /230VAC :110KHz

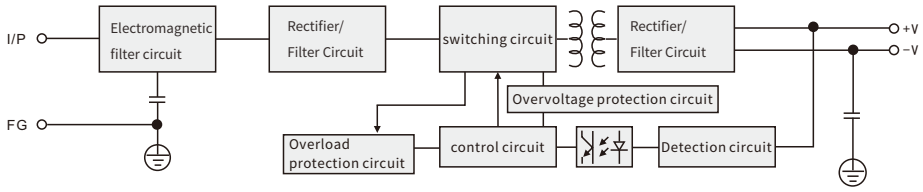

Dimensions

●BPS(15W) /Dimensional drawing(mm)

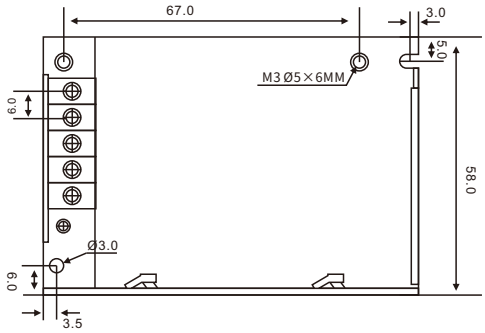

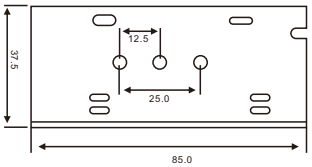

Wiring and connections

input		output	
L	Wire	V⁻	out-
N	neutral	V⁺	out+
⏚	Ground wire		

BPS Series of compact high-efficiency switching power supplies

Power range：15-150W

Dimensions

●BPS(35W、50W、75W) Dimensional drawing(mm)

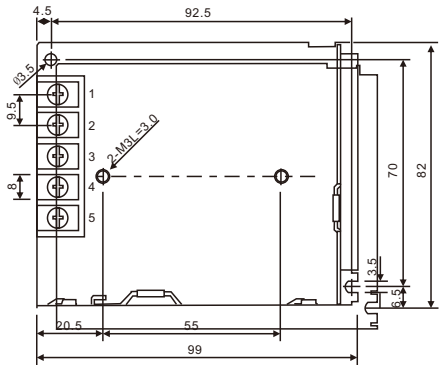

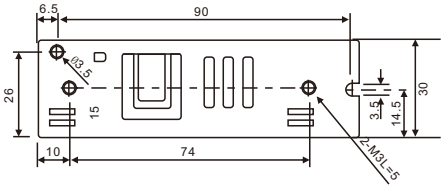

●BPS(100W) Dimensional drawing(mm)

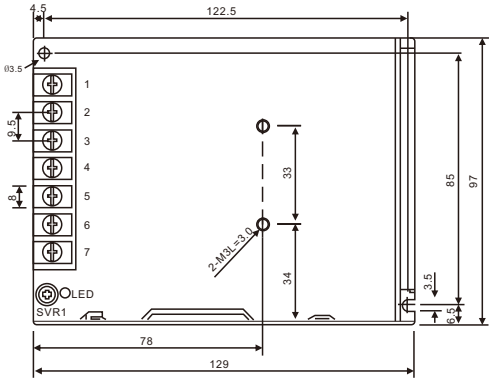

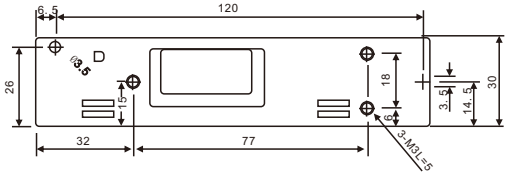

●BPS(150W) Dimensional drawing(mm)

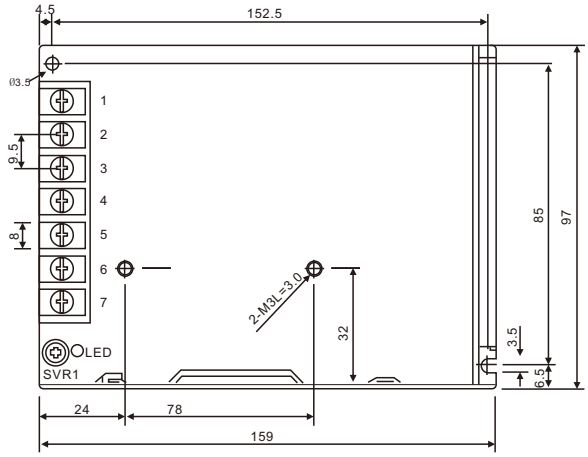

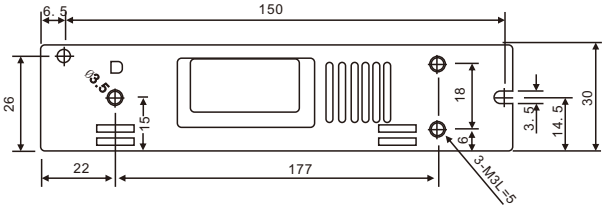

Precautions

* Operating temperature up to 70°C [158°F], with linear derating of 50°C to 70°C at half power [122°F to 158°F]. For more information, please contact your distributor.